A PROPOSED TENANT IMPROVEMENT FOR:

WINTERHAVEN PUBLIC SAFETY FACILITY

518 RAILROAD AVENUE
WINTERHAVEN, CA 92283

FIRE PROTECTION NOTES

1. THE FIRE SPRINKLER SYSTEM SHALL BE IN COMPLIANCE WITH **NFPA 13** AND THE CURRENT EDITION OF THE **C.B.C.** AND **C.F.C.** . SHOP DRAWINGS SHOWING ALL PROPOSED WORK SHALL BE APPROVED BY THE LOCAL JURISDICTION.
2. ALL INTERIOR FINISHES (WALL COVERING, CEILING TILE,ETC.) SHALL COMPLY WITH GSA CRITERIA FOR FLAME SPREAD, SMOKE DEVELOPMENT RATINGS, GSA REQUIREMENTS AND SHALL BE IN COMPLIANCE WITH THE CURRENT EDITION OF THE **C.B.C., C.F.C** AND **NFPA**.
3. ALL INTERIOR WALL AND CEILING FINISH MATERIALS SHALL HAVE A MINIMUM CLASS III FIRE SPREAD RATING, AND SHALL NOT EXCEED A FLAME SPREAD RATING OF 200 AND A SMOKE DENSITY RATING OF 450 AS SPECIFIED BY CURRENT EDITION OF THE C.B.C.
4. ALL INTERIOR VENEER(S) IF USED SHALL COMPLY WITH CURRENT EDITION OF THE C.B.C.
12. ALL SPECIAL LOCKING HARDWARE (CIPHER, KEY CARD, ETC.) MUST COMPLY WITH **NFPA 101, 5-2.1.6** AND BE OPENABLE WITH NO MORE THAN ONE RELEASING OPERATION FROM THE DIRECTION OF EGRESS. ALL SPECIAL LOCKING HARDWARE SHALL BE APPROVED BY GSA, SAFETY AND ENVIRONMENTAL MANAGEMENT BRANCH (9PMSF) PRIOR TO INSTALLATION.
13. ALL FLEXIBLE AIR DUCTS, IF USED, SHALL MEET THE REQUIREMENTS OF **NFPA 90A,2-3.2** IN CONSTRUCTION AND INSTALLATION.
14. FIRE DAMPERS OR DOORS SHALL BE PROVIDED WHERE AIR DUCTS PENETRATE FIRE RATED OR AREA SEPARATION WALLS . ALL REQUIRED PERMITS MUST BE OBTAINED FROM THE FIRE PREVENTION BUREAU BEFORE THIS EQUIPMENT IS INSTALLED.
15. FIRE DAMPER ASSEMBLIES, INCLUDING SLEEVES, AND INSTALLATION PROCEDURES SHALL BE APPROVED BY THE BUILDING INSPECTION DEPARTMENT PRIOR TO INSTALLATION.
16. COMPLETE PLANS AND SPECIFICATIONS FOR FIRE-EXTINGUISHER SYSTEMS, INCLUDING AUTOMATIC SPRINKLERS AND WET AND DRY STANDPIPES; HALON SYSTEMS AND OTHER SPECIAL TYPES OF AUTOMATIC FIRE-EXTINGUISHING SYSTEMS; BASEMENT PIPE INLETS; AND OTHER FIRE-PROTECTIONS SYSTEMS AND APPURTENANCES THERETO SHALL BE SUBMITTED TO FIRE AND LIFE SAFETY FOR REVIEW AND APPROVAL PRIOR TO INSTALLATION.
17. FOAM PLASTICS SHALL NOT BE USED AS INTERIOR FINISH EXCEPT AS PROVIDED IN CURRENT EDITION OF THE C.B.C.
18. CONTRACTOR TO PROVIDE SUFFICIENT 2A10BC FIRE EXTINGUISHERS SO THAT AN EXTINGUISHER CAN BE REACHED WITHIN 75 FEET OF NORMAL TRAVEL FROM ANY POINT REACHED WITHIN A SUITE. EXTINGUISHER LOCATIONS MAY BE DETERMINED BY FIELD INVESTIGATION AND SHALL BE AS REQUIRED BY THE LOCAL FIRE MARSHALL.
19. ALL VALVES CONTROLLING THE WATER SUPPLY FOR AUTOMATIC SPRINKLER SYSTEMS AND WATER-FLOW SWITCHES ON ALL SPRINKLER SYSTEMS SHALL BE ELECTRICALLY MONITORED WHERE THE NUMBER OF SPRINKLERS IS 20 OR MORE.
20. AUTOMATIC SPRINKLER SYSTEMS SERVING SPRINKLERS SHALL BE SUPERVISED BY AN APPROVED CENTRAL, PROPRIETARY, OR REMOTE STATION SERVICE, OR A LOCAL ALARM WHICH WILL GIVE AN AUDIBLE SIGNAL AT A CONSTANTLY ATTENDED LOCATION.
21. INSTALLATION OF FIRE ALARM SYSTEMS SHALL BE IN ACCORDANCE WITH CURRENT EDITION OF THE **C.B.C., C.F.C.** AND **NFPA 72**. SHOP DRAWINGS SHOWING MODIFICATIONS SHALL BE APPROVED BY THE LOCAL JURISDICTION.
22. AN APPROVED AUDIBLE SPRINKLER FLOW ALARM (BELL) SHALL BE PROVIDED ON THE EXTERIOR OF THE BUILDING IN AN APPROVED LOCATION.

FIRE BLOCKING NOTES

FIRE BLOCKING MUST BE PROVIDED IN ACCORDANCE WITH SECTION 717 AT THE FOLLOWING LOCATIONS:

1. IN CONCEALED SPACES OF STUD WALLS AND PARTITIONS, INCLUDING FURRED SPACES, AT THE CEILING AND FLOOR LEVELS.
2. IN CONCEALED SPACES OF STUD WALLS AND PARTITIONS, INCLUDING FURRED SPACES, AT 10-FOOT INTERVALS ALONG THE LENGTH OF THE WALL.
3. AT ALL INTERCONNECTIONS BETWEEN CONCEALED VERTICAL AND HORIZONTAL SPACES SUCH AS OCCUR AT SOFFITS, DROP CEILINGS AND COVE CEILINGS.
4. IN CONCEALED SPACES BETWEEN STAIRS STRINGERS AT THE TOP AND BOTTOM OF THE RUN AND BETWEEN STUDS ALONG AND IN LINE WITH THE RUN OF THE STAIRS IF THE WALL UNDER THE STAIRS IS UNFINISHED.
5. IN OPENINGS AROUND VENTS, PIPES, DUCTS, CHIMNEYS, FIREPLACES AND SIMILAR OPENINGS WHICH AFFORD A PASSAGE FOR FIRE AT CEILING AND FLOOR LEVELS, WITH NONCOMBUSTIBLE MATERIALS.

SYMBOLS / LEGEND

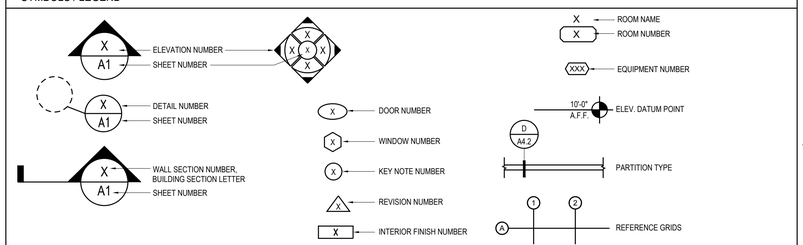

STRUCTURAL OBSERVATION

THE OWNER SHALL EMPLOY A REGISTERED DESIGN PROFESSIONAL TO PERFORM STRUCTURAL OBSERVATIONS. DEFICIENCIES SHALL BE REPORTED IN WRITING TO THE OWNER AND THE BUILDING OFFICIAL. AT THE CONCLUSION OF THE WORK INCLUDED IN THE PERMIT, THE STRUCTURAL OBSERVER SHALL SUBMIT TO THE BUILDING OFFICIAL A WRITTEN STATEMENT THAT THE SITE VISITS HAVE BEEN MADE AND IDENTIFY ANY REPORTED DEFICIENCIES WHICH, TO THE BEST OF THE STRUCTURAL OBSERVERS KNOWLEDGE, HAVE NOT BEEN RESOLVED.

SPECIAL INSPECTION PROGRAM

ADDRESS OR LEGAL DESCRIPTION: 518 RAILROAD AVE
WINTERHAVEN, CA 92283

PLAN CHECK NO.: 57373 OWNER'S NAME: IMPERIAL COUNTY DEVELOPMENT SERVICES

I AS THE OWNER, OR AGENT OF THE OWNER (CONTRACTORS MAY **NOT** EMPLOY THE SPECIAL INSPECTOR), CERTIFY THAT I, OR THE ARCHITECT/ ENGINEER OF RECORD, WILL BE RESPONSIBLE FOR EMPLOYING THE SPECIAL INSPECTOR(S) AS REQUIRED BY THE UNIFORM BUILDING CODE (CBC) SECTION 101.1 FOR THE CONTRUCTION PROJECT LOCATED AT THE SITE ABOVE. CBC SECTION 106.3.5.

SIGNED: _____ DATE: 2-1-17

I AS THE ENGINEER/ARCHITECT OF RECORD, CERTIFY THAT I HAVE PREPARED THE FOLLOWING SPECIAL INSPECTION PROGRAM AS REQUIRED BY SECTION 106.3.5 FOR THE CONSTRUCTION PROJECT LOCATED AT THE SITE ABOVE.

SIGNED: _____ DATE: 2-1-17

1. LIST OF WORK REQUIRING SPECIAL INSPECTION:

- [x] SOILS COMPLIANCE PRIOR TO FOUNDATION INSPECTION
- [x] STRUCTURAL CONCRETE OVER 2500 PSI
- [ ] PRESTRESSED CONCRETE
- [x] STRUCTURAL MASONRY
- [ ] DESIGNER SPECIFIED
- [x] SHEAR PANEL NAILING WHEN LESS THAN 6" O/C
- [x] FIELD WELDING
- [x] HIGH STRENGTH BOLTING
- [x] EXPANSION/EPOXY ANCHORS
- [ ] SPRAYED-ON FIREPROOFING
- [x] OTHER: STEEL CONSTRUCTION IN ACCORDANCE WITH CBC SECTION 1705.2

2. NAME(S) OF INDIVIDUAL(S) OR FIRMS RESPONSIBLE FOR THE SPECIAL INSPECTIONS LISTED ABOVE:

TBD

3. WORK REQUIRING SPECIAL INSPECTION

		INSPECTION TYPE
A.	SHEAR PANEL NAILING WHEN LESS THAN 6" O/C	PERIODIC
B.	EPOXY INSTALLED ANCHORS AND/OR TITEN HD BOLTS	PERIODIC
C.		
D.		

NOTE:
FOR MASONRY SUBJECT TO SEISMIC RESISTANCE, TESTING AND VERIFICATION OF MASONRY MATERIALS AND ASSEMBLIES PRIOR TO CONSTRUCTION ARE REQUIRED. SUBMITTAL OF A CERTIFICATE OF COMPLIANCE USED IN MASONRY CONSTRUCTION AND VERIFICATION OF f'm and f'AAC SHALL BE SUBMITTED TO THE COUNTY OF IMPERIAL SPECIAL INSPECTION SERVICES DIVISION PRIOR TO CONSTRUCTION.

SPECIAL INSPECTION NOTES

1. A CERTIFICATE OF SATISFACTORY COMPLETION ON WORK REQUIRING SPECIAL INSPECTION MUST BE COMPLETED AND SUBMITTED TO THE COUNTY OF IMPERIAL INSPECTION SERVICES DIVISION.
2. SPECIAL INSPECTOR AND/OR TESTING LABORATORYMUST BE APPROVED BY THE COUNTY OF IMPERIAL.
3. A PROPERTY OWNER'S FINAL REPORT OF WORK REQUIRING SPECIAL INSPECTION MUST BE COMPLETED BY THE PROPERTY OWNER, PROPERTY OWNER'S AGENT OF RECORD, ARCHITECT OF RECORD, OR ENGINEER OF RECORD & SUBMITTED TO THE COUNTY OF IMPERIAL INSPECTION SERVICES DIVISION.
4. THE SPECIAL INSPECTIONS IDENTIFIED ARE IN ADDITION TO THOSE REQUIRED BY SECTION 108 OF THE BUILDING CODE AS AMENDED. SPECIAL INSPECTION IS NOT A SUBSTITUTION INSPECTION BY A BUILDING DEPARTMENT INSPECTOR.
5. NOT USED
6. SPECIAL INSPECTORS SHALL CHECK IN WITH THE BUILDING DEPARTMENT AND PRESENT THEIR CREDENTIALS FOR APPROVAL PRIOR TO BEGINNING WORK ON THE JOB SITE.
7. SPECIAL INSPECTORS SHALL COMPLY WITH THE APPLICABLE PROVISIONS OF CHAPTER 17 OF THE 2012 C.B.C.

SITE ANALYSIS

AREA ANALYSIS

SITE AREA:	0.99 ACRES	43,380 SQ. FT.
PROPOSED BUILDING AREA:	9,727 SQ. FT.	
OUTDOOR PATIO AREA:	976 SQ. FT.	
PROPOSED BUILDING FOOTPRINT AREA:	10,703 SQ. FT.	
COVERAGE	24.6% COVERAGE	
LAND USE ZONE:	PCC - COMMERCIAL RETAIL	

PARKING ANALYSIS

PARKING SPACE PROVIDED:	27 STALLS

DESIGN CRITERIA

THIS PROJECT SHALL COMPLY WITH THE 2013 CALIFORNIA BUILDING CODE WHICH INCLUDES THE 2012 IBC, 2012 UMC & UPC, AND THE 2011 NEC AND TITLE 24 ENERGY AND DISABLE ACCESS REGULATIONS

- CALIFORNIA BUILDING STANDARDS ADMINISTRATIVE CODE (CBC), 2013 EDITION
- CALIFORNIA BUILDING CODE (CBC), 2013 EDITION
- CALIFORNIA GREEN BUILDING CODE (CGBC), 2013 EDITION
- CALIFORNIA PLUMBING CODE (CPC), 2013 EDITION
- CALIFORNIA MECHANICAL CODE (CMC), 2013 EDITION
- CALIFORNIA ELECTRICAL CODE (CEC), 2013 EDITION
- CALIFORNIA FIRE CODE (CFC), 2013 EDITION
- NATIONAL ELECTRICAL CODE (NEC), 2013 EDITION
- THE AMERICANS WITH DISABILITIES ACT (ADA
- TITLE 24, PART 2 CHAPTERS 10, 11, 11A & 11B, (CBC, 2013 EDITION)
- 2013 ENERGY STANDARDS

ASSESSOR'S PARCEL NUMBER

056-285-001

LEGAL DESCRIPTION

-

SCOPE OF WORK

THE WORK IN THESE "BUILDING PLANS" SHALL **INCLUDE BUT NOT LIMITED** TO THE FOLLOWING:

1. SITE WORK:
   a. ALL NEW SITE INFRASTRUCTURE AND PREPARATION OF BUILDING PAD
2. STRUCTURAL:
   a. CONSTRUCTION OF BUILDING FOR FIRE DEPARTMENT AND SHERIFF'S DEPARTMENT USE.
3. INTERIOR WALLS, CEILING & FINISHES:
   a. INSTALL INTERIOR WALLS AND FINISHES PER PLAN
4. PLUMBING SYSTEM:
   a. INSTALL PLUMBING SYSTEMS FOR RESTROOMS, LOCKER ROOM SHOWER FACILITIES, FIRE STATION KITCHEN AND SERVICE AREAS.
5. MECHANICAL SYSTEM:
   a. INSTALL MECHANICAL SYSTEMS ASSOCIATED WITH FIRE STATION LIVING QUARTERS, LOCKER ROOMS AND RESTROOMS.
6. ELECTRICAL SYSTEM:
   a. INSTALLATION OF ELECTRICAL SWITCHGEAR(S) AND SUB-PANELS
   b. INSTALLATION OF EXTERIOR LIGHTS
   c. INSTALLATION OF INTERIOR LIGHTING AND/OR RECEPTACLES
   d. INSTALLATION OF ELECTRICAL SUB-PANEL
   e. INSTALLATION OF J-BOX EXTERIOR SIGNS
   f. INSTALLATION OF RECEPTACLES
7. FIRE SUPPRESSION SYSTEM (UNDER SEPARATE PERMIT):
   a. UNDER A SEPARATE PERMIT - BY OTHERS

VICINITY MAP

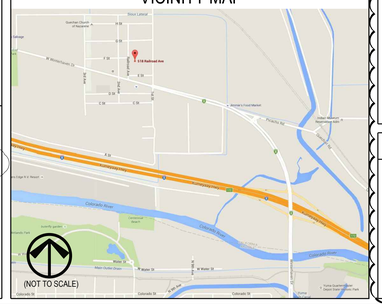

PROJECT DIRECTORY

PROPERTY OWNER
COUNTY OF IMPERIAL
PLANNING & DEVELOPMENT SERVICES
801 MAIN STREET
EL CENTRO, CA 92243
CONTACT: NORMA LILLEGARD
P- (760) 482.4236
F- (760)
e-mail: NormaLillegard@co.imperial.ca.us

ARCHITECT
MPA ARCHITECTS, INC.
3578 30TH ST
SAN DIEGO , CA 92104
CONTACT: JOHN RUMSEY.
P. (619) 236.0595 EXT. 322
F.- (619) 236.0557
e-mail: jrumsey@mpa-architects.com

CIVIL ENGINEER
DYNAMIC CONSULTING ENGINEERS, INC.
2415 IMPERIAL BUSINESS PARK DR., STE. B
IMPERIAL, CA 92251
CONTACT: CARLOS BELTRAN, P.E.
P- (760) 545.0162
F- (760) 545.0163
e-mail: cbeltran@dceinc.pro

STRUCTURAL ENGINEER
MPA ARCHITECTS, INC.
3578 30TH ST
SAN DIEGO , CA 92104
CONTACT: JOHN RUMSEY.
P. (619) 236.0595 EXT. 322
F.- (619) 236.0557
e-mail: jrumsey@mpa-architects.com

MECHANICAL / PLUMBING
BTA ENGINEERS, INC.
9845 ERMA RD, SUITE 204
SAN DIEGO, CA 92131
CONTACT: BONG MANLULU
P.- (858) 715.6601
F.- (858) 433.7587
e-mail: bong@btaengineers.com

ELECTRICAL DESIGNER
NUTTER ELECTRICAL DESIGN, INC.
3103 FALCON ST. SUITE B
SAN DIEGO, CA 92103
CONTACT: DAVID NUTTER
P- (619) 278.0076 EXT. 1#
F.- (619) 278.0078
e-mail: nedinc@pacbell.net

CONTRACTOR
TO BE DETERMINED
-
-
CONTACT: -
P-
F-
e-mail: -

COVER SHEET NOTES

1. HAZARDOUS MATERIALS WILL NOT BE STORED AND/OR USED WITHIN THE PROPOSED BUILDING WHICH EXCEED THE QUANTITIES LISTED IN CBC TABLE 307.1(1)
2. CONTRACTOR SHALL BE RESPONSIBLE FOR PEDESTRIAN PROTECTION DURING DEMOLITION AND CONSTRUCTION PER GOVERNING CODE.
3. THE CONSTRUCTION SHALL NOT RESTRICT A FIVE-FOOT CLEAR AND UNOBSTRUCTED ACCESS TO ANY WATER OR POWER DISTRIBUTION FACILITIES (POWER POLES, PULL-BOXES, TRANSFORMERS, VAULTS, PUMPS, VALVES, METERS, APPURTENANCES, ETC.) OR TO THE LOCATION OF THE HOOK-UP. THE CONSTRUCTION SHALL NOT BE WITHIN TEN FEET OF ANY POWER LINES-WHETHER OR NOT THE LINES ARE LOCATED ON THE PROPERTY. FAILURE TO COMPLY MAY CAUSE CONSTRUCTION DELAYS AND/OR ADDITIONAL EXPENSES.
4. AN APPROVED SEISMIC GAS SHUTOFF VALVE WILL BE INSTALLED ON THE FUEL GAS LINE ON THE DOWN STREAM SIDE OF THE UTILITY METER AND BE RIGIDLY CONNECTED TO THE EXTERIOR OF THE BUILDING OR STRUCTURE CONTAINING THE FUEL GAS PIPING.

ABBREVIATIONS

ABV	ABOVE	MFG	MANUFACTURE (R)
AFF	ABOVE FINISH FLOOR	MAX	MAXIMUM
A/C	AIR CONDITIONING	MECH	MECHANICAL
ALUM	ALUMINUM	MIN	MINIMUM
ARCH	ARCHITECT (URAL)	MISC	MISCELLANEOUS
@	AT	MULL	MULLION
BM	BEAM	NIC	NOT IN CONTRACT
BLK	BLOCK (ING)	NTS	NOT TO SCALE
BOT	BOTTOM	NG	NATURAL GRADE
BLDG	BUILDING	OFF	OFFICE
CLG	CEILING	O/C	ON CENTER
CIR	CIRCUIT	OPN'G	OPENING
CL	CLEAR	OPH	OPPOSITE HAND
COL	COLUMN	OD	OUTSIDE DIAMETER
CONC	CONCRETE		
CONST	CONSTRUCTION	PNT	PAINT (ED)
CONT	CONTINUOUS	PLAM	PLASTIC LAMINATE
CTR	COUNTER	PWD	PLYWOOD
		POL	POLISHED
DTL	DETAIL	PROJ	PROJECT
DIA	DIAMETER		
DIM	DIMENSION	RE	REFERENCE
DBL	DOUBLE	REFR	REFRIGERATOR
DF	DOUGLAS FIR	REM	REMOVE (D) (ABLE)
DN	DOWN	REQD	REQUIRED
DR	DOOR	RELS	RESILIENT
DWR	DRAWER	REV	REVISION (S) REVISED
DWG	DRAWING	RM	ROOM
		RO	ROUGH OPENING
EA	EACH	RD	ROUND
EGB	EDGE BAND		
ELEV	ELEVATION	SCH	SCHEDULE
EQ	EQUAL	SECT	SECTION
EQPT	EQUIPMENT	SHT	SHEET
(E)	EXISTING	SIM	SIMILAR
EXP	EXPOSED	SGL	SINGLE
EXT	EXTERIOR	SLDG	SLIDING
EG	EXTERIOR GRADE	SC	SOLID CORE
		SLD SUR	SOLID SURFACE
FOS	FACE OF STUD	SPEC	SPECIFICATION
FT	FEET, FOOT	SS	STAINLESS STEEL
FIN	FINISH (ED)	STO	STORAGE
FF	FINISH FLOOR	STR	STRUCTURAL
FP	FIREPLACE	SUSP	SUSPENDED
FL	FLOOR (ING)	SWR	SEWER / SEWER LINE
FD	FLOOR DRAIN		
FLUR	FLUORESCENT		
FG	FUEL GAS	TEL	TELEPHONE
FUR	FURRED (ING)	TYP	TYPICAL
		THRU	THROUGH
GYP BRD	GYPSUM BOARD		
		VIF	VERIFY IN FIELD
HB	HOSE BIBB	VTC	VINYL COMPOSITION TILE
HC	HOLLOW CORE	VERT	VERTICAL
HDW	HARDWARE	VTR	VENT THRU ROOF
HDWD	HARDWOOD	VTC	VENT THRU CEILING
HORIZ	HORIZONTAL		
HVAC	HEATING/VENTILATION/ AIR CONDITIONING	W/	WITH
		W/O	WITHOUT
		WC	WATER CLOSET
IN (")	INCH	WD	WOOD
ID	INSIDE DIAMETER	WDB	WOOD BASE
INT	INTERIOR	WI	WROUGHT IRON
		WTR	WATER / WATER LINE
LAV	LAVATORY		

UNDERGROUND SERVICE ALERT

CALL BEFORE YOU DIG

TWO WORKING DAYS BEFORE YOU DIG
Section 4216/4217 of the Government Code requires a Dig Alert Identification Number be issued before a Permit to Excavate will be valid. For your Dig Alert Identification Number call

call: TOLL FREE 1-800-422-4133 (Southern California)
call: TOLL FREE 1-800-227-2600 (Northern California)
call: TOLL FREE 1-800-227-2600 (Nevada)

SHEET INDEX

CS1.0 COVER SHEET & VICINITY MAP

CIVIL SECTION (FOR REFERENCE)
1 OF 7 CIVIL TITLE SHEET
2 OF 7 DEMOLITION PLAN
3 OF 7 IMPROVEMENT AND GRADING PLAN
4 OF 7 DETAILS
5 OF 7 DETAILS
6 OF 7 EROSION CONTROL PLAN
7 OF 7 EROSION CONTROL DETAILS

ARCHITECTURAL SECTION
AS1.0 ARCHITECTURAL SITE PLAN
AS2.0 SITE PLAN DETAILS
CG1.0 CAL-GREEN COMPLIANCE FORMS
A0.1 EXITING PLAN
A1.0 GENERAL ARCHITECTURAL NOTES
A1.1 OVERALL FLOOR PLAN
A1.2 ENLARGED FLOOR PLAN (FIRE STATION)
A1.3 ENLARGED FLOOR PLAN (SHERIFF'S STATION)
A1.4 MEZZANINE FLOOR PLAN & REFLECTED CEILING PLAN
A1.5 ENLARGED ROOM PLANS
A2.0 REFLECTED CEILING PLAN
A2.1 REFLECTED CEILING PLAN DETAILS
A3.0 ROOF PLAN
A4.0 BUILDING EXTERIOR ELEVATIONS
A4.1 BUILDING SECTIONS
A4.2 BUILDING SECTIONS
A5.0 EXIT SIGN AND MISC. SIGN DETAILS
A5.1 WALL DETAILS
A5.2 WALL DETAILS
A5.3 STAIR & HANDRAIL DETAILS
A6.0 RESTROOM DETAILS
A6.1 RESTROOM DETAILS
A7.0 INTERIOR ELEVATIONS
A7.1 INTERIOR ELEVATIONS
A8.0 DOOR AND WINDOW SCHEDULES
A8.1 DOOR AND WINDOW DETAILS
A8.2 FINISHES SCHEDULE

STRUCTURAL SECTION
S1.0 FOUNDATION PLAN
S2.0 FRAMING PLAN
S2.1 GYP. BD. CEILING FRAMING PLAN
SD1.0 FOUNDATION DETAILS
SD1.1 FOUNDATION / FRAMING DETAILS
SD1.2 FRAMING DETAILS

STRUCTURAL (METAL BUILDING MANUFACTURER'S DRAWINGS)
C1 COVER SHEET
C2 BUILDING INFO AND NOTES
C3 BUILDING INFO AND NOTES
C4 BUILDING INFO AND NOTES
C5 STANDARD WELDS AND LEGEND
F1 ANCHOR BOLT PLAN
F2 ANCHOR BOLT DETAILS
P1 MARK NUMBER PLAN
P2 CROSS SECTION AT LINE 1
P3 PLATE AND BOLTS AT LINE 1
P4 CROSS SECTION AT LINE 2
P5 PLATE AND BOLTS AT LINE 2
P6 CROSS SECTION AT LINE 3
P7 PLATE AND BOLTS AT LINE 3
P8 CROSS SECTION AT LINE 5
P9 PLATE AND BOLTS AT LINE 5
P10 CROSS SECTION AT LINE 6
P11 PLATE AND BOLTS AT LINE 6
P12 CROSS SECTION AT LINE 7
P13 PLATE AND BOLTS AT LINE 7
P14 PORTAL CROSS SECTION AT LINE J
R1 ROOF FRAMING PLAN
R2 PURLIN BRACING / ROOF F.O.
W1 WALL FRAMING ELEVATION AT LINE 1
W2 WALL FRAMING ELEVATION AT LINE E
W3 WALL FRAMING ELEVATION AT LINE 5
W4 WALL FRAMING ELEVATION AT LINE A
D1 GENERAL DETAILS
D2 PRIMARY DETAILS
D3 PRIMARY DETAILS
D4 ROOF FRAMING DETAILS
D5 ROOF FRAMING DETAILS
D6 WALL FRAMING DETAILS
D7 WALL FRAMING DETAILS
S1 ROOF SHEETING PLAN
S2 ROOF SHEETING PLAN
S3 CEILING LINER PLAN
S4 LINER PANEL
S5 LINER PANEL
SD1 SHEETING DETAILS
SD2 SHEETING DETAILS
SD3 SHEETING DETAILS
SD4 SHEETING DETAILS
SD5 SHEETING DETAILS
SD6 SHEETING DETAILS
IMP1 EXTERIOR WALL SHEATHING PLAN
IMP2 EXTERIOR WALL SHEATHING PLAN
IMP3 EXTERIOR WALL SHEATHING PLAN
IMP4 EXTERIOR WALL SHEATHING PLAN
IMPD1 EXTERIOR WALL SHEATHING DETAILS
IMPD2 EXTERIOR WALL SHEATHING DETAILS
IMPD3 EXTERIOR WALL SHEATHING DETAILS
IMPD4 EXTERIOR WALL SHEATHING DETAILS
IMPD5 EXTERIOR WALL SHEATHING DETAILS
IMPD6 EXTERIOR WALL SHEATHING DETAILS

MECHANICAL SECTION
M1.0 MECHANICAL SCHEDULES, NOTES & LEGEND
M1.1 MECHANICAL TITLE 24 COMPLIANCE FORMS
M1.2 MECHANICAL TITLE 24 COMPLIANCE FORMS
M1.3 MECHANICAL TITLE 24 COMPLIANCE FORMS
M2.0 MECHANICAL PLAN
M3.0 MECHANICAL DETAILS
M3.1 MECHANICAL DETAILS

PLUMBING SECTION
P1.0 PLUMBING NOTES
P1.1 PLUMBING SCHEDULES
P2.0 PLUMBING SITE PLAN
P3.0 PLUMBING DOMESTIC WATER & VENT PLAN
P3.1 PLUMBING WATER PLAN
P4.0 PLUMBING DETAILS

ELECTRICAL SECTION
E1.0 ELECTRICAL SITE PLAN
E1.P ELECTRICAL PHOTOMETRIC SITE PLAN
E2.0 ELECTRICAL LIGHTING PLAN
E2.P ELECTRICAL PHOTOMETRIC PLAN
E3.0 ELECTRICAL POWER PLAN
E4.0 LOW VOLTAGE PLAN
E5.0 ELECTRICAL MECHANICAL PLAN
E6.0 ELECTRICAL SCHEDULES
E7.0 PANEL SCHEDULES
E8.0 SINGLE LINE DIAGRAM
E9.0 ELECTRICAL TITLE 24 COMPLIANCE FORMS
E10.0 ELECTRICAL TITLE 24 COMPLIANCE FORMS
E11.0 ELECTRICAL TITLE 24 COMPLIANCE FORMS
E12.0 ELECTRICAL TITLE 24 COMPLIANCE FORMS

MPA ARCHITECTS INC.
3578 30th Street
San Diego, CA 92104
V. 619.236.0595
F. 619.236.0557
www.mpa-architects.com
MEMBER
AMERICAN INSTITUTE OF ARCHITECTS

CLIENT
COUNTY OF IMPERIAL
PLANNING & DEV. SERVICES DEPT
801 MAIN STREET
EL CENTRO, CA 92243
(760) 482-4236

PROJECT
A PROPOSED PUBLIC SAFTY FACILITY FOR:
WINTERHAVEN PUBLIC SAFETY FACILITY
WINTERHAVEN, CA

REVISIONS

NO.	DESCRIPTION	DATE
1	PLAN CHECK CHANGES	02-01-17
2	PLAN CHECK CHANGES	03-01-17
3	PLAN CHECK CHANGES	03-16-17
4	PRE-BID REVISIONS	03-23-17
7	BID REVISIONS	05-19-17
9	BID REVISIONS	06-07-17

LICENSED ARCHITECT JOHN RUMSEY C-26013 Exp. 3-31-2019 STATE OF CALIFORNIA

SHEET TITLE
COVER SHEET

DATE: 04-17-16	SCALE: AS NOTED
DRAWN BY: CB	DATABASE: 15137 CS1.0.DWG
CHECKED BY: JR	SHEET NUMBER: CS1.0
PROJECT NO: 15137	

© Copyright 2015, MPA Architects, Inc., All rights reserved.

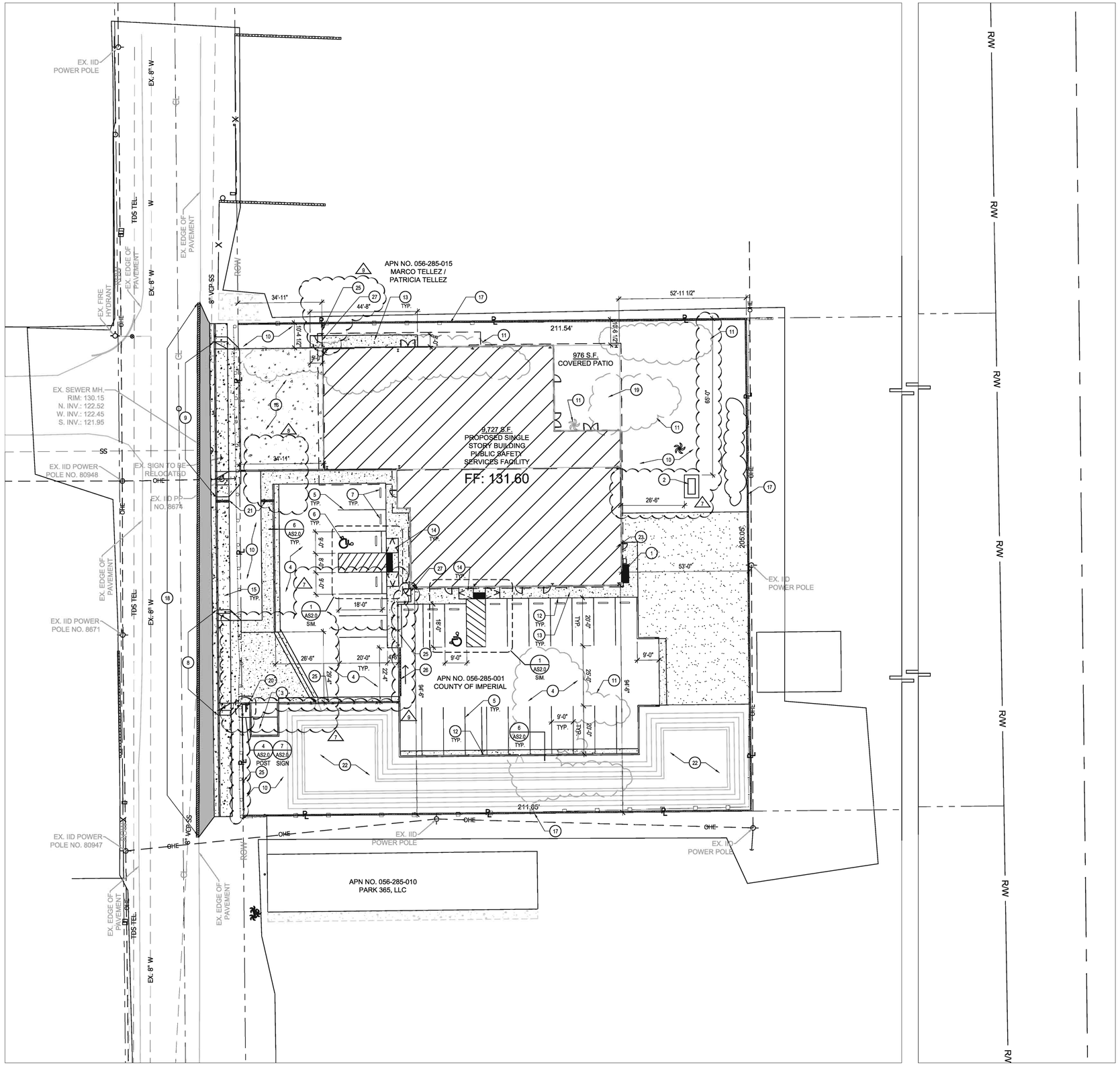

NORTH

1" = 30'-0"

SITE PLAN

A

KEYNOTES

1. ELECTRICAL EQUIPMENT LOCATION
2. EMERGENCY GENERATOR LOCATION
3. TRASH ENCLOSURE LOCATION
4. PARKING DRIVEWAY AND PARKING AREA, SEE CIVIL PLANS FOR FURTHER INFORMATION.
5. 9'X20' PARKING STALL, TYP., PROVIDE 4" WIDE PAINTED PARKING SPACE BOUNDARY STRIPES, COLOR: WHITE. PAINT SHALL BE TWO LAYERS OF TRAFFIC PAINT.
6. 9' X 18' ACCESSIBLE PARKING STALL, TYPICAL. ALL PARKING STALLS ABUTTING PEDESTRIAN SIDEWALKS SHALL INCLUDE WHEEL STOPS, ENCROACHMENT OVER SIDEWALKS SHALL NOT REDUCE MINIMUM WIDTH FOR PATH OF TRAVEL.
7. PROVIDE WHEEL STOP AT PARKING STALL ADJACENT TO AISLE OF TRAVEL, TYP.
8. PUBLIC DRIVEWAY ENTRANCE
9. DRIVEWAY ENTRANCE FOR FIRE DEPARTMENT APARATUS, SEE CIVIL PLANS FOR FURTHER INFO.
10. LANDSCAPE AREA
11. EXISTING PLANTS TO BE REMOVED
12. CONCRETE CURB
13. CONCRETE SIDEWALK, 2% MAXIMUM CROSS SLOPE.
14. ACCESSIBLE RAMP, RAMP SHALL COMPLY WITH FEDERAL, STATE AND LOCAL STANDARDS.
15. PUBLIC SIDEWALK, SEE CIVIL PLANS FOR FURTHER INFORMATION
16. FIRE APPARATUS CONCRETE DRIVEWAY, SEE CIVIL PLANS FOR FURTHER INFORMATION
17. MASONRY SCREEN WALL ALONG PROPERTY LINE, SEE CIVIL PLANS FOR FURTHER INFORMATION.
18. CURB AND GUTTER ALONG PUBLIC RIGHT OF WAY, SEE CIVIL PLANS FOR FURTHER INFORMATION.
19. 4" THICK CONCRETE PAD FOR EXTERIOR COVERED PATIO
20. TOW AWAY SIGN AND SIGN POLE.
21. UNDER SIDEWALK DRAIN, SEE CIVIL PLANS FOR FURTHER INFORMATION.
22. RETENTION BASIN, SEE CIVIL PLANS FOR FURTHER INFORMATION.
23. LOCATION OF FIRE SPRINKLER RISER
24. NOT USED
25. INSTALL 6 FT HIGH WROUGHT IRON FENCE, SEE CIVIL PLANS FOR FURTHER INFORMATION.
26. INSTALL 20 FT AUTOMATIC GATE, SEE CIVIL PLANS FOR FURTHER INFORMATION.
27. INSTALL PEDESTRIAN GATE, SEE CIVIL PLANS FOR FURTHER INFORMATION.
28. -

MPA ARCHITECTS INC.

3578 30th Street
San Diego, CA 92104
V. 619.236.0595
F. 619.236.0557
www.mpa-architects.com

MEMBER
AMERICAN INSTITUTE OF ARCHITECTS

CLIENT

COUNTY OF IMPERIAL
PLANNING & DEV.
SERVICES DEPT
801 MAIN STREET
EL CENTRO, CA 92243
(760) 482-4236

PROJECT

A PROPOSED PUBLIC SAFTY FACILITY FOR:

WINTERHAVEN PUBLIC SAFETY FACILITY

WINTERHAVEN, CA

REVISIONS

NO.	DESCRIPTION	DATE
7	BID REVISIONS	05-19-17
8	BID REVISIONS	05-19-17
9	BID REVISIONS	06-07-17

LICENSED ARCHITECT
JOHN RUMSEY
C26819
Exp. 3-31-2017
STATE OF CALIFORNIA

SHEET TITLE

SITE PLAN

DATE: 6/8/2017	SCALE: No Scale
DRAWN BY: MPA	DATABASE: 15137AS1.0
CHECKED BY: -	SHEET NUMBER: AS1.0
PROJECT NO: 15137	

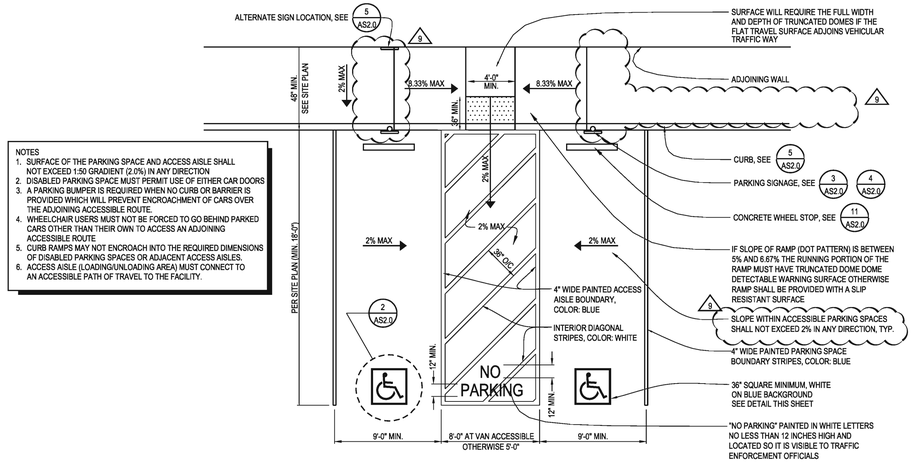

NOTES
1. SURFACE OF THE PARKING SPACE AND ACCESS AISLE SHALL NOT EXCEED 1:50 GRADIENT (2.0%) IN ANY DIRECTION
2. DISABLED PARKING SPACE MUST PERMIT USE OF EITHER CAR DOORS
3. A PARKING BUMPER IS REQUIRED WHEN NO CURB OR BARRIER IS PROVIDED WHICH WILL PREVENT ENCROACHMENT OF CARS OVER THE ADJOINING ACCESSIBLE ROUTE.
4. WHEELCHAIR USERS MUST NOT BE FORCED TO GO BEHIND PARKED CARS OTHER THAN THEIR OWN TO ACCESS AN ADJOINING ACCESSIBLE ROUTE
5. CURB RAMPS MAY NOT ENCROACH INTO THE REQUIRED DIMENSIONS OF DISABLED PARKING SPACES OR ADJACENT ACCESS AISLES.
6. ACCESS AISLE (LOADING/UNLOADING AREA) MUST CONNECT TO AN ACCESSIBLE PATH OF TRAVEL TO THE FACILITY.

NOTES
1. SYMBOL PAINTED HIGHWAY WHITE (TWO COATS)
2. BACKGROUND PAINTED BLUE OR EQUAL TO COLOR #15090 IN FEDERAL STANDARD 595A

VAN ACCESSIBLE PARKING STALLS (1)

NO SCALE

15C02

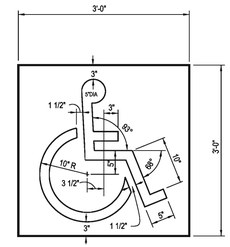

DISABLED PARKING SYMBOL (2)

NO SCALE

COLORS:
BORDERS & LEGEND - WHITE (RETROREFLECTIVE)
BACKGROUND - BLUE (RETROREFLECTIVE)

NOTE:
EACH PARKING SPACE RESERVED FOR PERSONS WITH PHYSICAL DISABILITIES SHALL BE IDENTIFIED BY A REFLECTORIZED SIGN PERMANENTLY POSTED IMMEDIATELY ADJACENT TO AND FROM EACH STALL OR SPACE, CONSISTING OF A PROFILE VIEW OF A WHEELCHAIR WITH OCCUPANT IN WHITE ON DARK BLUE BACKROUND. THE SIGN SHALL NOT BE SMALLER THAN 70 SQUARE INCHES IN AREA AND, WHEN IN A PATH OF TRAVEL, SHALL BE POSTED AT A MINIMUM HEIGHT OF 80 INCHES FROM THE BOTTOM OF THE SIGN TO THE PARKING SPACE FINISH GRADE. SIGNS MAY ALSO BE CENTERED ON THE WALL AT THE INTERIOR END OF THE PARKING SPACE AT A MINIMUM HEIGHT OF 36" FROM THE PARKING SPACE FINISH GRADE, GROUND OR SIDEWALK.

HANDICAP PARKING SIGNAGE (FREE STANDING) (3)

NO SCALE

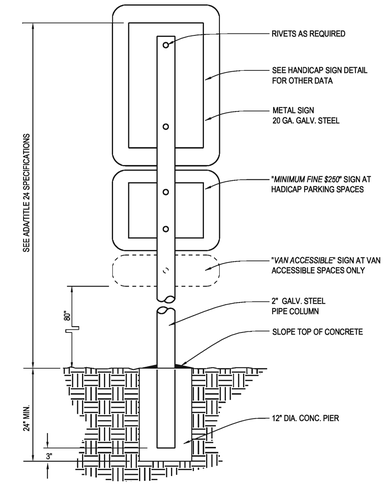

SIGN POLE DETAIL (4)

NO SCALE

COLORS:
BORDERS & LEGEND - WHITE (RETROREFLECTIVE)
BACKGROUND - BLUE (RETROREFLECTIVE)

NOTE:
EACH PARKING SPACE RESERVED FOR PERSONS WITH PHYSICAL DISABILITIES SHALL BE IDENTIFIED BY A REFLECTORIZED SIGN PERMANENTLY POSTED IMMEDIATELY ADJACENT TO AND FROM EACH STALL OR SPACE, CONSISTING OF A PROFILE VIEW OF A WHEELCHAIR WITH OCCUPANT IN WHITE ON DARK BLUE BACKROUND. THE SIGN SHALL NOT BE SMALLER THAN 70 SQUARE INCHES IN AREA AND, WHEN IN A PATH OF TRAVEL, SHALL BE POSTED AT A MINIMUM HEIGHT OF 80 INCHES FROM THE BOTTOM OF THE SIGN TO THE PARKING SPACE FINISHED GRADE. SIGNS MAY ALSO BE CENTERED ON THE WALL AT THE INTERIOR END OF THE PARKING SPACE AT A MINIMUM HEIGHT OF 36" FROM THE PARKING SPACE FINISH GRADE, GROUND OR SIDEWALK.

HANDICAP PARKING SIGNAGE (WALL MOUNTED) (5)

NO SCALE

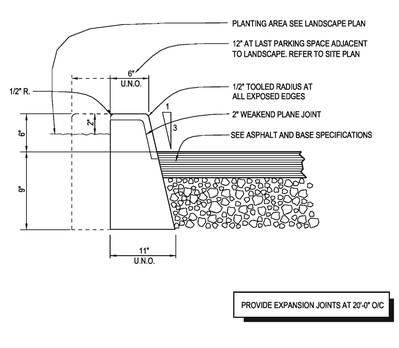

CONCRETE CURB (6)

1 1/2"=1'-0"

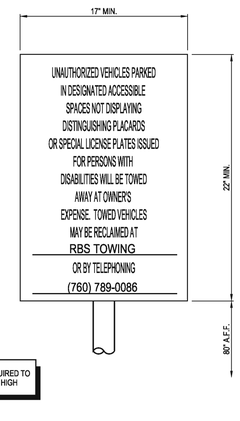

PARKING SIGNAGE (7)

NO SCALE

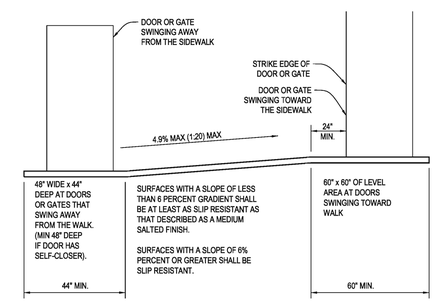

1. SURFACE CROSS SLOPES SHALL NOT EXCEED 1/4" INCH PER FOOT.
2. WHEN THE SLOPE IN THE DIRECTION OF TRAVEL OF ANY WALK EXCEEDS 1:20 (5%) IT SHALL COMPLY WITH THE PROVISIONS OF SECTION 3307, PEDESTRIAN RAMPS.
3. ABRUPT CHANGES IN LEVEL ALONG ANY ACCESSIBLE ROUTE SHALL NOT EXCEED 1/2 INCH. WHEN CHANGES IN LEVEL DO OCCUR, THEY SHALL BE BEVELED WITH A SLOPE NO GREATER THAN 1:2, EXCEPT THAT LEVEL CHANGES NOT EXCEEDING 1/4" MAY BE VERTICAL. IF LEVEL CHANGES > 1/2" THEY MUST COMPLY WITH THE REQUIREMENTS OF CURB RAMPS
4. ABRUPT CHANGES IN LEVEL, EXCEPT BETWEEN A WALK OR SIDEWALK AND AN ADJACENT STREET OR DRIVEWAY, EXCEEDING 4 INCHES IN A VERTICAL DIMENSION, SUCH AS AT PLANTERS OR FOUNTAINS LOCATED IN OR ADJACENT TO WALKS OR OTHER PEDESTRIAN WAYS, SHALL BE IDENTIFIED BY CURBS PROJECTING AT LEAST 6 INCHES IN HEIGHT ABOVE THE WALK OR SIDEWALK SURFACE TO WARN THE BLIND OR A POTENTIAL DROP OFF.
5. ALL WALKS WITH CONTINUOUS GRADIENTS SHALL HAVE LEVEL AREAS AT LEAST 5 FEET IN LENGTH AT INTERVALS OF AT LEAST EVERY 400 FEET

SIDEWALK SPECIFICATIONS (8)

NO SCALE

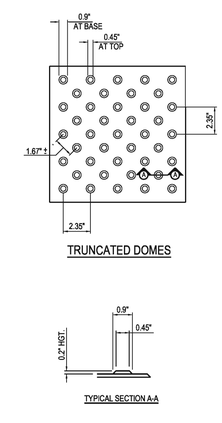

TRUNCATED DOME DETAIL (9)

NO SCALE

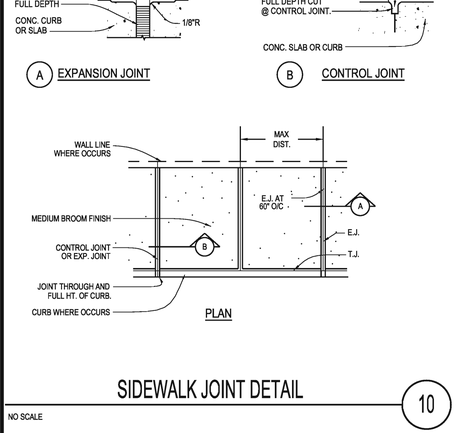

SIDEWALK JOINT DETAIL (10)

NO SCALE

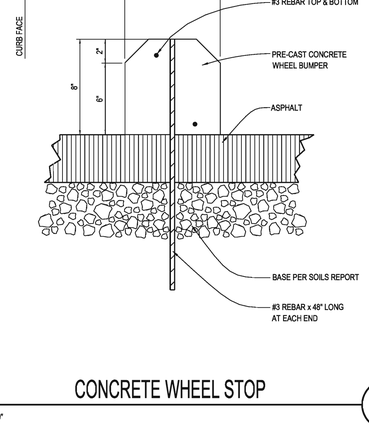

CONCRETE WHEEL STOP (11)

1 1/2"=1'-0"

COLORS:
BORDERS & LEGEND - WHITE (RETROREFLECTIVE)
BACKGROUND - BLUE (RETROREFLECTIVE)

ACCESSIBLE PATH OF TRAVEL SIGN (12)

NO SCALE

MPA ARCHITECTS INC.
3578 30th Street
San Diego, CA 92104
V. 619.236.0595
F. 619.236.0557
www.mpa-architects.com
MEMBER
AMERICAN INSTITUTE OF ARCHITECTS

CLIENT
COUNTY OF IMPERIAL
PLANNING & DEV. SERVICES DEPT
801 MAIN STREET
EL CENTRO, CA 92243
(760) 482-4236

PROJECT
A PROPOSED PUBLIC SAFTY FACILITY FOR:
WINTERHAVEN PUBLIC SAFETY FACILITY
WINTERHAVEN, CA

REVISIONS

NO.	DESCRIPTION	DATE
9	BID REVISIONS	06-07-17

LICENSED ARCHITECT
JOHN RUMSEY
C26813
Exp. 3-31-2017
STATE OF CALIFORNIA

SHEET TITLE
SITE DETAILS

DATE:	SCALE:
DRAWN BY:	DATABASE:
CHECKED BY:	SHEET NUMBER:
PROJECT NO:	AS2.0

© Copyright 2014 MPA Architects Inc. Ex parte reproduced