GENERAL NOTES

1. ALL MATERIALS AND WORKMANSHIP SHALL CONFORM TO THE LATEST CALIFORNIA CODE OF REGULATIONS (CCR), NATIONAL ELECTRICAL CODE EDITION AND ALL APPLICABLE LOCAL CODES AND REGULATIONS.
2. ALL PANELS, SWITCHES, ETC. SHALL HAVE SUFFICIENT GUTTER SPACE AND LUGS IN COMPLIANCE TO UL REQUIREMENTS TO ACCOMMODATE CONDUCTORS SHOWN.
3. WHERE WIRE SIZES ARE INDICATED ON PLANS, FOR INDIVIDUAL CIRCUITS, THE WIRE SIZE INDICATED SHALL APPLY TO THE COMPLETE CIRCUIT, UNLESS OTHERWISE NOTED.
4. CONTRACTOR SHALL VERIFY THE EXACT LOCATION OF MECHANICAL, PLUMBING AND OTHER EQUIPMENT REQUIRING ELECTRICAL CONNECTION PRIOR TO ANY WORK.
5. CONTRACTOR SHALL EXTEND WIRING FROM ALL JUNCTION BOXES, SWITCHES, ETC. AND MAKE FINAL CONNECTION AS REQUIRED TO ALL BUILDING EQUIPMENT REQUIRING ELECTRICAL CONNECTIONS.
6. LOCATION OF LOCAL WALL SWITCHES ARE SUBJECT TO MODIFICATIONS. AT OR NEAR DOORS, INSTALL SWITCHES ON SIDE OPPOSITE TO DOOR HINGE. VERIFY FINAL HINGE LOCATION IN FIELD PRIOR TO ANY WORK.
7. DRAWINGS ARE DIAGRAMMATIC AND INDICATE GENERAL ARRANGEMENT OF SYSTEMS AND WORK INCLUDED. FOLLOW DRAWINGS IN LAYING OUT WORK AND CHECK DRAWINGS OR OTHER TRADES RELATING TO WORK TO VERIFY SPACE IN WHICH WORK WILL BE INSTALLED. MAINTAIN HEADROOM AND MINIMUM CODE REQUIRED WORKING CLEARANCES AT ALL TIMES.
8. CONTRACTOR SHALL COORDINATE THE LOCATION OF ALL WALL OUTLET BOXES FOR SWITCHES, BELL/STROBES, FIRE ALARM PULL STATIONS. RECEPTACLES ETC. WITH CABINETS, FURNITURE, EQUIPMENT ETC., TO AVOID CONFLICT.
9. WHERE ELECTRIC MOTORS OR HEATERS ARE INSTALLED IN HUNG CEILINGS, PROVIDE DISCONNECT SWITCH IN HUNG CEILING WITHIN REACH FROM ACCESS POINT.
10. FURNISH APPROVED EXPANSION FITTINGS WHERE RACEWAY CROSSES BUILDING EXPANSION JOINTS.
11. FURNISH PULL STRING IN EACH RACEWAY RUN OVER 10' IN LENGTH, IN WHICH PERMANENT WIRING IS NOT INSTALLED.
12. NOT MORE THAN THREE LIGHTING OR CONVENIENCE OUTLET CIRCUITS ARE PERMITTED IN ONE CONDUIT, PROVIDE SEPARATE CONDUIT FOR EACH HOMERUN INDICATED ON THE DRAWING, UNLESS INDICATED OTHERWISE.
13. PROVIDE PULL BOXES WHEREVER NECESSARY TO FACILITATE PULLING OF CONDUCTORS. COORDINATE LOCATIONS OF BOXES WITH OTHER TRADES TO AVOID CONFLICT. PULL BOXES SHALL BE ACCESSIBLE. THE SIZE OF PULL BOX SHALL COMPLY WITH N.E.C. REQUIREMENTS.
14. OUTLET BOXES FOR FIXTURES RECESSED IN HUNG CEILING SHALL BE ACCESSIBLE THROUGH OPENING CREATED BY REMOVAL OF FIXTURES.
15. SEE MECHANICAL AND PLUMBING DRAWINGS AND SPECIFICATION FOR ADDITIONAL CONNECTION REQUIREMENTS TO CONTROL PANELS, CONTROL TRANSFORMERS, POWER FOR CONTROL SYSTEM EP AND PE SWITCHES, TIME CLOCKS, VALVES, STATS, RELAYS, DUCT SMOKE DETECTOR LOCATIONS, ETC. INDICATED ON CONTROL WIRING DIAGRAMS. ELECTRICAL CONTRACTOR SHALL VERIFY FINAL CONTROL WIRING REQUIREMENTS WITH MECHANICAL AND PLUMBING CONTRACTORS PRIOR TO ANY WORK AND PROVIDE ALL NECESSARY DEVICES AND CONNECTIONS AS REQUIRED.
16. ALL EXTERIOR ELECTRICAL DEVICES AND EQUIPMENT INCLUDING THOSE THAT ARE EXPOSED TO OUTSIDE ENVIRONMENT (UP TO 16') SHALL BE WEATHERPROOF TYPE, NEMA 3R.
17. NO CONDUIT RUNS SHALL BE ALLOWED IN CONCRETE SLABS. ALL CONDUITS WILL BE PLACED ABOVE ACCESSIBLE CEILING SPACES UNLESS SPECIFICALLY INDICATED TO BE UNDERGROUND.
18. LIGHTING, POWER, TELEPHONE AND COMMUNICATIONS OUTLETS SHALL NOT BE PLACED BACK-TO-BACK.
19. WHERE MORE THAN ONE LIGHT SWITCH OCCURS AT SAME LOCATION, SWITCHES SHALL BE MOUNTED IN A MULTIPLE GANG BOX UNDER A SINGLE COVER PLATE. PLATES WITH MORE THAN (3) LIGHT SWITCHES SHALL BE LABELED TO INDICATE THE LIGHT FIXTURES CONTROLLED.
20. DISCONNECT SWITCHES SHALL BE MOUNTED ON INDIVIDUAL SUPPORTS, OR OTHERWISE DIRECTLY ON EQUIPMENT, PROVIDED NO MODIFICATION TO EQUIPMENT IS NECESSARY.
21. ALL ELECTRICAL POWER LIGHTING, TELEPHONE OR SIGNAL WIRING IN FIRE RATED WALL IS TO BE INSTALLED IN A METALLIC CONDUIT SYSTEM.
22. ALL ELECTRIC MATERIAL SHALL BE LISTED BY "UL" FOR THE TYPE OF APPLICATION AND "UL" LABEL SHALL APPEAR ON ALL ELECTRICAL EQUIPMENT.
23. CONTACT UTILITY COMPANIES FOR SCOPE OF WORK PRIOR TO SUBMITTING BID; INCLUDE UTILITY CHARGES IF ANY.
24. ALL DISTRIBUTION AND CONTROL EQUIPMENT (SUCH AS CB's, SWITCHES, CONTACTORS, ETC.), TERMINATIONS SHALL BE FULLY RATED PER UL AS FOLLOWS:

    a. 125A OR LESS : 60℃ OR MORE;
    b. MORE THAN 125A : 75℃ OR MORE.

25. CONDUCTORS SHALL HAVE UNDERWRITER'S LABORATORIES, INC.(UL) LISTED, 600 VOLT INSULATION OF TYPE SPECIFIED BELOW OR ELSEWHERE IN THE SPECIFICATIONS. CONDUCTORS SHALL BE COPPER.

    1. BRANCH CIRCUITS - LIGHTING AND POWER.

    a. #10 AWG AND SMALLER, SOLID WIRE TYPE THW OR THHN/THWN, THHW(THHN FOR DRY LOCATION ONLY).
    b. #8 AWG TO #2 AWG, STRANDED TYPE THW OR THHN/THHW.
    c. #1 AWG AND LARGER, STRANDED TYPE XHHW.

    2. FEEDERS : TYPE THW OR THHN/THWN, OR XHHW.

26. PROVIDE GREEN INSULATED GROUNDING CONDUCTOR IN EACH RACEWAY INCLUDING CONDUITS, PLUG STRIPS, WIREMOLD. SIZE OF GROUNDING SHALL BE IN ACCORDANCE WITH NATIONAL ELECTRIC CODE ARTICLE 250.
27. WIRING METHOD SHALL BE EMT ABOVE GROUND AND MOUNTED IN CONCEALED SPACES AND SCHEDULE-40 PVC FOR UNDERGROUND INSTALLATION. USE RIGID WHEN ENCASED IN CONCRETE OR SUSCEPTIBLE TO DAMAGE.
28. USE 10AWG CONDUCTORS FOR 20 AMPERE, 120V BRANCH CIRCUITS LONGER THAN 75 FEET. USE 10AWG CONDUCTORS FOR 20 AMPERE, 277V BRANCH CIRCUITS LONGER THAN 200 FEET.
29. PROVIDE 110V OUTLET, CFL LIGHT & SWITCH FOR LIGHT @ FAU IN ATTIC, WHERE APPLICABLE.
30. ALL SWITCH LOCATIONS ARE REQUIRED TO HAVE A NEUTRAL CONDUCTOR PROVIDED AT THE SWITCH LOCATION PER CEC 404.2(C). (1)
31. OWNER TO PROVIDE RISK ASSESSMENT REPORT PER CEC 708.4 AND CONTRACTOR TO ADDRESS AS REQUIRED.
32. ALL BOXES AND ENCLOSURES (INCLUDING TRANSFER SWITCHES, GENERATORS, AND POWER PANELS) FOR CRITICAL OPERATIONS POWER SYSTEMS (C.O.P.S) SHALL BE PERMANENTLY MARKED SO THEY WILL BE READILY INDENTIFIED AS A COMPONENT OF THE CRITICAL OPERATIONS POWER SYSTEM PER CEC 708.10.

APPLICABLE CODES

1. 2016 BUILDING STANDARDS ADMINISTRATIVE CODE, PART 1, TITLE 24 C.C.R.
2. 2016 CALIFORNIA BUILDING CODE (CBC),PART 2, TITLE 24 C.C.R. (IBC WITH AMENDMENTS)
3. 2016 CALIFORNIA ELECTRICAL CODE (CEC), PART 3, TITLE 24 C.C.R. (NEC WITH AMENDMENTS)
4. 2016 CALIFORNIA MECHANICAL CODE (CMC), PART 4, TITLE 24 C.C.R. (UMC WITH AMENDMENTS)
5. 2016 CALIFORNIA PLUMBING CODE (CPC), PART 5, TITLE 24 C.C.R. (UPC WITH AMENDMENTS)
6. 2016 CALIFORNIA FIRE CODE, PART 9, TITLE 24 C.C.R. (IFC WITH AMENDMENTS)
7. 2016 CALIFORNIA REFERENCED STANDARDS, PART 12, TITLE 24 C.C.R.
8. 2016 TITLE 19 C.C.R., PUBLIC SAFETY, STATE FIRE MARSHAL REGULATIONS.
9. 2016 CALIFORNIA ENERGY CODE (PART 6, TITLE 24 C.C.R.)
10. 2016 CALIFORNIA GREEN BUILDING STANDARDS CODE (CGBSC), PART 11, TITLE 24 C.C.R.

ABBREVIATIONS

A	AMPERE
AF	AMPERE FRAME RATING
AFF	ABOVE FINISHED FLOOR
AIC	AMPERE INTERRUPTING CAPACITY
AFG	ABOVE FINISHED GRADE
AT	AMPERE TRIP RATING
AWG	AMERICAN WIRE GAUGE
BKBD	BACKBOARD
BLDG	BUILDING
BKR	BREAKER
C	CONDUIT
CB	CIRCUIT BREAKER
CKT	CIRCUIT
CO	CONDUIT ONLY
CONC	CONCRETE
CT	CURRENT TRANSFORMER
CU	COPPER
℄	CENTERLINE
DISC	DISCONNECT
DSBN	DISTRIBUTION SECTION
DN	DOWN
DWG	DRAWING
EA	EACH
EC	ELECTRICAL CONTRACTOR
EM	EMERGENCY
EXIST, (E)	EXISTING
EXO	EXTERNAL OPERABLE DISCONNECT
F	FUSE
FF	FINISHED FLOOR
FG	FINISHED GRADE
FLA	FULL LOAD CURRENT
GEN	GENERATOR
GFCI	GROUND FAULT CIRCUIT INTERRUPTER
GFP	GROUND FAULT PROTECTION
GND	GROUND
HOA	HAND-OFF-AUTOMATIC
HP	HORSE POWER
HV	HIGH VOLTAGE
IDF	INTERMEDIATE DISTRIBUTION FRAME
IG	ISOLATED/INSULATED GROUND
ISC	SHORT CIRCUIT CURRENT AVAILABLE IN RMS SYMMETRICAL AMPERES
J-BOX	JUNCTION BOX
KCMIL	THOUSAND CIRCULAR MILS
KW	KILOWATT
KV	KILO VOLT
KVA	KILO VOLT-AMPERE
LDC	LOCAL DISTRIBUTION CABINET
LDF	LOCAL DISTRIBUTION FRAME
LCL	LONG CONTINUOUS LOAD
LTG	LIGHTING
LV	LOW VOLTAGE
MFR	MANUFACTURER
MAX	MAXIMUM
MCC	MOTOR CONTROL CENTER
MIN	MINIMUM
MH	MANHOLE / METAL HALIDE
M/M	METER AND MAIN SECTION
MULTI	MULTI-METER SECTION
(E)	EXISTING DEVICE TO REMAIN
(R)	REMOVE EXISTING DEVICE AND ASSOCIATED CONDUIT AND WIRE
N	NEUTRAL
NC	NORMALLY CLOSED
NEC	NATIONAL ELECTRICAL CODE
NEMA	NATIONAL ELECTRICAL MANUFACTURER'S ASSOCIATION
NEW (N)	NEW, TO BE FURNISHED AND INSTALLED BY CONTRACTOR
NF	NON-FUSED
NIC	NOT IN CONTRACT
N/L	NIGHT LIGHT
NO	NUMBER, NORMALLY OPEN
NTS	NOT TO SCALE
OC	ON CENTER
OD	OUTSIDE DIAMETER
P	POLE
PB	PULL BOX
PF	POWER FACTOR
PNL	PANEL
POC	POINT OF CONNECTION
PP	POWER POLE
PWR	POWER
PVC	POLYVINYL CHLORIDE
QUAD	QUADRUPLEX
QTY	QUANTITY
REQD	REQUIRED
REQMT	REQUIREMENT
RGS	RIGID GALVANIZED STEEL
RM	ROOM
SHT	SHEET
SN	SOLID NEUTRAL
SPEC	SPECIFICATIONS
SPDT	SINGLE POLE, DOUBLE THROW
SPST	SINGLE POLE, SINGLE THROW
SW	SWITCH
SWBD	SWITCHBOARD
TC	TIME CLOCK
TEL	TELEPHONE
TERM	TERMINAL
TP	TEMPORARY POLE
TYP	TYPICAL
UGPS	UNDERGROUND PULL SECTION
UL	UNDERWRITERS LABORATORY
UPS	UNINTERRUPTIBLE POWER SUPPLY
UON	UNLESS OTHERWISE NOTED
V	VOLT, VOLTAGE
VA	VOLT-AMPERE
VFC	VARIABLE FREQUENCY CONTROLLER
VFD	VARIABLE FREQUENCY DRIVE
W	WATT
WH	WATT-HOUR
WP	WEATHERPROOF
WT	WEATHERTIGHT
WW	WIREWAY
XP	EXPLOSION PROOF
Z	IMPEDANCE
4W	FOUR-WIRE
3W	THREE-WIRE
5S	JUNCTION BOX (4 11/16" SQUARED X2 1/8" DEEP)
`	DIAMETER, PHASE
#	NUMBER
℃	DEGREE CELSIUS

LIGHTING LEGEND AND SYMBOLS

SYMBOL	DESCRIPTION
FN ab N/L	2'X4' RECESSED LUMINAIRE. FN INDICATES LUMINAIRE TYPE - REFER TO LUMINAIRE SCHEDULE, TYPICAL. SUBSCRIPT 2ab REFERS TO CIRCUIT AND SWITCH LEG 'a' AND 'b'. SUBSCRIPT N/L REFERS TO UNSWITCHED LEG.
FNE	2'X4' RECESSED LED LUMINAIRE WITH 90MIN. EMERGENCY BATTERY BACKUP
	SURFACE MOUNTED DOUBLE FACE EXIT SIGN (UNIVERSAL ARROWS INDICATED AS NEEDED)
	SURFACE MOUNTED SINGLE FACE EXIT SIGN (UNIVERSAL ARROWS INDICATED AS NEEDED)
	SWITCH, SINGLE POLE 20A. MOUNTED 48" A.F.F. TO TOP OF DEVICE. SUBSCRIPTS INDICATE THE FOLLOWING: M - MOTOR RATED, K - KEY OPERATED, 3 - THREE WAY, D - DIMMER SWITCH, 4 - FOUR WAY, T - TIMED SWITCH. a, b, c, ETC. - DESIGNATES SWITCH-LEGS CONTROLLED AND QUANTITY OF SWITCHES AT EACH LOCATION.
S ab	LOW-VOLTAGE DIMMER SWITCH. MOUNTED 48" A.F.F. TO TOP OF DEVICE. a, b, c, ETC. - DESIGNATES SWITCH-LEGS CONTROLLED AND QUANTITY OF SWITCHES AT EACH LOCATION.
M ab	LOW-VOLTAGE OCCUPANCY SENSOR, DUAL-TECHNOLOGY, SURFACE WALL / CEILING MOUNTED INTERCONNECTED TO NETWORK LIGHTING CONTROLS.
RC	CEILING MOUNTED DIGITAL ROOM CONTROLLER INTERCONNECTED TO NETWORK LIGHTING CONTROLS.
PB	CONCRETE ELECTRICAL PULLBOX WITH LID APPROPRIATE FOR INSTALLATION LOCATION. LID SHALL BE LABELED ACCORDING TO USE.
	SMOKE FIRE DAMPER
DD	DUCT MOUNTED SMOKE DETECTOR.
T	THERMOSTAT SUPPLIED BY MECHANICAL CONTRACTOR, ELECTRICAL CONTRACTOR SHALL STUB 3/4" C.O. 6" ABOVE CEILING SPACE, PROVIDE BUSHING AND PULL WIRE. IF INSTALLED IN AREA WITH EXPOSED STRUCTURE ABOVE OR HARDLID CEILING, PROVIDE 3/4" C.O. BACK TO ASSOCIATED HVAC UNIT. REFER TO MECHANICAL DETAILS FOR T-STAT MOUNTING HEIGHT REQUIREMENTS.
P	CEILING MOUNTED PLUG LOAD CONTROLLER.

SIGNAL LEGEND AND SYMBOLS

SYMBOL	DESCRIPTION
	COMBINATION TELEPHONE & DATA OUTLET BOX 4S, MOUNTED +15" A.F.F. TO BOTTOM OF DEVICE U.O.N. STUB 3/4" C.O. 6" ABOVE CEILING SPACE, PROVIDE BUSHING AND PULL WIRE. IF INSTALLED IN AREA WITH EXPOSED STRUCTURE ABOVE OR HARD LID CEILING, PROVIDE 3/4" C.O. BACK TO LOCATION OF NEAREST IDF/MDF, COMMUNICATIONS CABINET, OR TELEPHONE BACKBOARD.
	COMBINATION TELEPHONE & DATA OUTLET BOX 4S, MOUNTED HEIGHT HORIZONTALLY ABOVE COUNTER TOP PER ARCHITECTURAL PLANS OR APPROVAL STUB 3/4" C.O. 6" ABOVE CEILING SPACE, PROVIDE BUSHING AND PULL WIRE. IF INSTALLED IN AREA WITH EXPOSED STRUCTURE ABOVE OR HARD LID CEILING, PROVIDE 3/4" C.O. BACK TO LOCATION OF NEAREST IDF/MDF, COMMUNICATIONS CABINET, OR TELEPHONE BACKBOARD.

NOTE TO CONTRACTOR

DO NOT SCALE DRAWINGS

CONTRACTOR SHALL VERIFY PLANS AND EXISTING DIMENSIONS AND CONDITIONS ON THE JOB SITE AND SHALL IMMEDIATELY NOTIFY THE ARCHITECT IN WRITING OF ANY DISCREPANCIES BEFORE PROCEEDING WITH THE WORK OR BE RESPONSIBLE FOR THE SAME.

SHEET INDEX

SHEET #	SHEET NAME
E-0.1	ELECTRICAL LEGENDS & NOTES
E-0.2	LUMINAIRE SCHEDULE
E-0.3	TITLE 24 DOCUMENTS
E-0.4	TITLE 24 DOCUMENTS
E-0.5	SINGLE LINE DIAGRAM & PANEL SCHEDULE
E-1.1	ELECTRICAL SITE PLAN
E-1.2	LIGHTING PHOTOMETRIC SITE PLAN
E-2.1	POWER & SIGNAL FLOOR PLAN
E-3.1	ROOF POWER PLAN
E-4.1	LIGHTING FLOOR PLAN
E-4.2	LIGHTING PHOTOMETRIC PLAN
E-5.1	ELECTRICAL DETAILS

POWER LEGEND AND SYMBOLS

SYMBOL	DESCRIPTION
	DUPLEX RECEPTACLE OUTLET, CONVENIENCE. (20 AMPS, 125 VOLTS) MOUNTED +15" A.F.F. TO BOTTOM OF DEVICE U.O.N.
	DOUBLE DUPLEX RECEPTACLE OUTLET, CONVENIENCE. (20 AMPS, 125 VOLTS) MOUNTED +15" A.F.F. TO BOTTOM OF DEVICE U.O.N.
	DUPLEX RECEPTACLE OUTLET, CONVENIENCE. (20 AMPS, 125 VOLTS, GFCI TYPE) MOUNTED +15" A.F.F. TO BOTTOM OF DEVICE U.O.N.
	DUPLEX RECEPTACLE OUTLET, CONVENIENCE. (20 AMPS, 125 VOLTS) WITH MOUNTING HEIGHT HORIZONTALLY ABOVE COUNTER TOP PER ARCHITECTURAL PLANS OR APPROVAL.
	DUPLEX RECEPTACLE OUTLET, CONVENIENCE. (20 AMPS, 125 VOLTS, GFCI TYPE) WITH MOUNTING HEIGHT HORIZONTALLY ABOVE COUNTER TOP PER ARCHITECTURAL PLANS OR APPROVAL.
	CA TITLE 24 COMPLIANT DUPLEX RECEPTACLE OUTLET, HALF-CONTROLLED, CONVENIENCE, WITH PERMANENT MARKING. (20 AMPS, 125 VOLTS) MOUNTED +15" A.F.F. TO BOTTOM OF DEVICE U.O.N.
	CA TITLE 24 COMPLIANT DOUBLE DUPLEX RECEPTACLE OUTLET, HALF-CONTROLLED, CONVENIENCE, WITH PERMANENT MARKING. (20 AMPS, 125 VOLTS) MOUNTED +15" A.F.F. TO BOTTOM OF DEVICE U.O.N.
WP	WEATHERPROOF DUPLEX RECEPTACLE OUTLET, CONVENIENCE. (20 AMPS, 125 VOLTS) MOUNTED +15" A.F.F. TO BOTTOM OF DEVICE U.O.N.
D	DUPLEX RECEPTACLE OUTLET ON DEDICATED CIRCUIT (20 AMPS, 125 VOLTS) MOUNTED +15" A.F.F. TO BOTTOM OF DEVICE U.O.N.
	250 VOLT RECEPTACLE OUTLET, NEMA 6-20R MOUNTED +15" A.F.F. TO BOTTOM OF DEVICE U.O.N.
	DUPLEX RECEPTACLE OUTLET, SINGLE SPLIT-CIRCUIT SWITCHED. (20 AMPS, 125 VOLTS) MOUNTED +15" A.F.F. TO BOTTOM OF DEVICE U.O.N.
	SURFACE MOUNTED DUPLEX RECEPTACLE OUTLET, CONVENIENCE. (20 AMPS, 125 VOLTS) MOUNTED + 15" A.F.F. TO BOTTOM OF DEVICE U.O.N.
	RECESSED CEILING MOUNTED DUPLEX RECEPTACLE OUTLET, CONVENIENCE. (20 AMPS, 125 VOLTS)
J	ABOVE CEILING, CONCEALED, JUNCTION BOX, WITH COVER, PER NATIONAL ELECTRICAL CODE (NEC) TABLE 370-b(a), 4" SQUARE DEEP, WITH PLASTER RING
J	RECESSED WALL MOUNTED, JUNCTION BOX, WITH COVER, PER NATIONAL ELECTRICAL CODE (NEC) TABLE 370-b(a), 4" SQUARE DEEP, WITH PLASTER RING
	DUPLEX RECEPTACLE FLUSH IN FLOOR, WATERTIGHT JUNCTION BOX, HINGED BRASS COVER (20 AMPS, 125 VOLTS) U.O.N.
	DOUBLE DUPLEX RECEPTACLE, FLUSH IN FLOOR, WATERTIGHT JUNCTION BOX (20 AMP, 120 VOLT, 2-POLE, 3-WIRE) U.O.N.
J	JUNCTION BOX, FLUSH IN FLOOR, WATERTIGHT JUNCTION BOX (20 AMP, 120 VOLT, 2-POLE, 3-WIRE) U.O.N.
L5-30R	SPECIALTY OUTLET. VERIFY NEMA CONFIGURATION AS NOTED ON PLANS.
	BRANCH PANELBOARD, WALL MOUNTED, SEE PLANS AND SCHEDULE. (RECESSED MOUNTED)
OR	BRANCH PANELBOARD, WALL MOUNTED, SEE PLANS AND SCHEDULE. (SURFACE MOUNTED)
	MAIN SWITCHBOARD, POWER OR LIGHT, FLOOR STANDING ENCLOSURE, (SEE SINGLE LINE DIAGRAM AND LOAD SUMMARY)
F	DISCONNECT SWITCH H.P. RATED 600 VOLTS. "F" INDICATES FUSE TYPE. FUSES PER APPROVED MANUFACTURERS SHOP DRAWINGS.
#2	MAGNETIC MOTOR STARTER H.P. RATED (NUMBERS INDICATE NEMA SIZE)
+96" OR +7'-6" AFF	MOUNTING HEIGHT FROM FINISHED FLOOR TO CENTERLINE OF OUTLET OR EQUIPMENT . FOR LIGHT FIXTURES, IT IS TO BOTTOM OF FIXTURE.
DETAIL No. / SHEET No.	DETAIL REFERENCE
EQUIPMENT / ID No.	EQUIPMENT REFERENCE
# / SHEET No. / DETAIL No.	ELEVATION REFERENCE
	CONDUIT TURN DOWN
	CONDUIT TURN UP
	CONDUIT STUBBED AND CAPPED
	RACEWAY CONCEALED IN WALLS OR ABOVE CEILING
	CONDUIT CONCEALED IN OR UNDER FLOOR, COORDINATE WITH G.C.: OR, BURIAL CONDUIT UNDERGROUND IN SCHEDULE - 40 PVC UNLESS NOTED OTHERWISE. VERIFY DEPTH AND TRENCHING WITH G.C.
—(E)—	EXISTING CONDUIT AND WIRING TO REMAIN
—(R)—	PULL-OUT WIRES AND ABANDON CONDUIT. CUT AND CAPPED FLUSH WITH WALL OR SLAB.
— E —	EXISTING CONDUIT TO REMAIN
— R —	EXISTING CONDUIT AND WIRE TO BE REMOVED
—PR—	ELECTRICAL UTILITY PRIMARY
—SC—	ELECTRICAL UTILITY SECONDARY
— T —	TELEPHONE UTILITY
—OH—	TEMPORARY OVERHEAD CABLING
(E)	EXISTING DEVICE TO REMAIN
(R)	REMOVE EXISTING DEVICE AND ASSOCIATED CONDUIT AND WIRE
(RL)	REMOVE EXISTING DEVICE AND RELOCATE AS SHOWN ON PLAN
(NL)	NEW LOCATION OF RELOCATED DEVICE
A-1,3	HOMERUN TO CIRCUITS #1 AND #3 IN PANEL "A" (CROSSMARKS INDICATE NUMBER OF WIRES AND DOTTED CROSSMARK INDICATES GROUND WIRE.)
	3/4" CONDUIT WITH 2 #12 & 1 #12 GND WIRE U.O.N.
	3/4" CONDUIT WITH 3 #12 & 1 #12 GND WIRE U.O.N.
	3/4" CONDUIT WITH 4 #12 & 1 #12 GND WIRE U.O.N.
	3/4" CONDUIT WITH 5 #12 & 1 #12 GND WIRE U.O.N.
#10	3/4" CONDUIT WITH 2 #10 & 1 #10 GND WIRE (#10 INDICATES WIRE SIZE)
#10	3/4" CONDUIT WITH 3 #10 & 1 #10 GND WIRE (#10 INDICATES WIRE SIZE)
#10	3/4" CONDUIT WITH 4 #10 & 1 #10 GND WIRE (#10 INDICATES WIRE SIZE)
#10	3/4" CONDUIT WITH 5 #10 & 1 #10 GND WIRE (#10 INDICATES WIRE SIZE)
#10	1" CONDUIT WITH 6 #10 & 1 #10 GND WIRES (#10 INDICATING WIRE SIZE) GROUND WELL
	GROUND WELL
	EXISTING (DASH INDICATES) ELECTRICAL EQUIPMENT
	TELEPHONE BACKBOARD 2'X4'X3/4" PLYWOOD. PROVIDE 2" CONDUIT TO TELEPHONE POC.
	MOLDED CASE CIRCUIT BREAKER
	SWITCH AND FUSE ASSEMBLY
	UTILITY COMPANY PULL SECTION LUGS
	GROUNDING CONNECTION TO MAIN BUILDING GROUND SYSTEM U.O.N.
N G	GROUNDING CONNECTION AT SWITCHGEAR/DISTRIBUTION BOARD WITH NEUTRAL BONDING.
M	IN-LINE UTILITY COMPANY METER
M	UTILITY METER WITH CURRENT TRANSFORMERS (CT'S) METER
SS	SOLID STATE DEVICE CONNECTED TO THE POWER DISTRIBUTION SYSTEM
GFP	GROUND FAULT PROTECTION DEVICE CONNECTED TO THE POWER DISTRIBUTION SYSTEM
T OR	TRANSFORMER WITH SECONDARY GROUND
G	ON-SITE GENERATOR SET
200-D	CONDUIT WIRING DESCRIPTION PER FEEDER SCHEDULE ON OTHER PLAN

(The homerun and 3/4" / 1" conduit entries are bracketed: CONCEALED IN WALL OR CEILING)

HOLT ARCHITECTURE

70225 HWY 111, SUITE D
RANCHO MIRAGE, CA 92270
PH: 760.328.5280

3891 11TH STREET
RIVERSIDE, CA 92501
PH: 951.462.1451

CONSULTANT:

275 W. Hospitality Lane Suite #100
San Bernardino, CA 92408
Phone: 909.890.3700
Fax: 909.890.3770
email: info@designwesteng.com

DESIGN WEST ENGINEERING
MECHANICAL • ELECTRICAL • ENERGY CONSULTANTS

STAMPS:

REGISTERED PROFESSIONAL ENGINEER
LEONARD P. MAYA
No. E19480
Exp. 6-30-2021
ELECTRICAL
STATE OF CALIFORNIA

PROJECT:

NILAND PUBLIC SAFETY FACILITY

8071 LUXOR AVE.
NILAND CA 92257

CLIENT:

IMPERIAL COUNTY CALIFORNIA 1907

MARK	DATE	DESCRIPTION
	04/09/19	PLAN CHECK SUBMITTAL #1
1	05/14/19	PLAN CHECK SUBMITTAL #2
2	06/11/19	PLAN CHECK SUBMITTAL #3

PROJECT NO.:	TGH.012
DRAWN BY:	LR
CHK'D BY:	JB
ORIGINAL DATE:	

SHEET TITLE:

ELECTRICAL LEGENDS & NOTES

SHEET No.:

E-0.1

19-022

© 2018 Holt Architects, Inc.

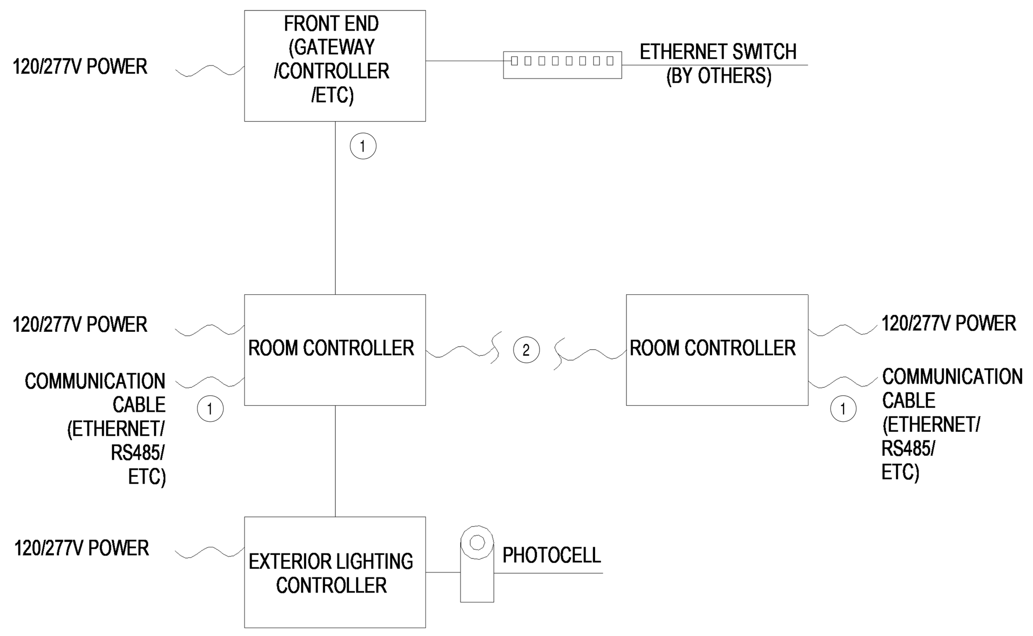

GENERAL NOTES:

1. INSTALL ALL LIGHTING PER MANUFACTURER'S REQUIREMENTS

2. BUILDINGS OVER 10,000 SQUARE FEET SHALL BE CAPABLE OF RECEIVING A DEMAND RESPONSE SIGNAL. LIGHTING CONTROLS SHALL BE PROGRAMMED TO AUTOMATICALLY DIM 15% OF THE BUILDINGS TOTAL INSTALLED LIGHTING POWER.

3. OWNER SHALL BE PROVIDED ALL NECESSARY SOFTWARE AND/OR LICENSES TO MODIFY SCHEDULES, ALL SETPOINTS INCLUDING OCC SENSOR DELAYS AND PHOTOCELL DIMMING LEVELS. SCHEDULE AND SETPOINT ADJUSTMENTS SHALL BE BROWSER BASED. ALL CONTROLLERS SHALL BE NAMED ACCORDING TO THE ROOM NAME THEY SERVE AS SHOWN ON CONSTRUCTION DOCUMENTS.

CONSTRUCTION NOTES:

(1) LOW VOLTAGE CABLING SHALL BE PER MANUFACTURER REQUIREMENTS

(2) CONTRACTOR TO PROVIDE COMPLETE NETWORKED LIGHTING CONTROL SYSTEM.

SEQUENCE OF OPERATION - OVERALL

DEMAND RESPONSE - DIM ALL NON-CRITICAL ZONES BY 15% UPON RECEIVING A DEMAND RESPONSE SIGNAL.
SCHEDULE - PROGRAM LIGHTING OCCUPIED/UNOCCUPIED PERIOD PER OWNER'S DEFINED SCHEDULE.

SEQUENCE OF OPERATION - EXTERIOR

PHOTOCELL - AUTO ON ALL EXTERIOR LIGHTS WHEN PHOTOCELL DETECTS XX FC OR LESS.
SCHEDULE - SCHEDULE OFF ALL EXTERIOR LIGHTS PER OWNER'S REQUIREMENTS. IF OWNER HAS NOT PROVIDED SCHEDULE, PROGRAM LIGHTS OFF AT 11PM.

LIGHTING CONTROLS NETWORK ARCHITECTURE 1

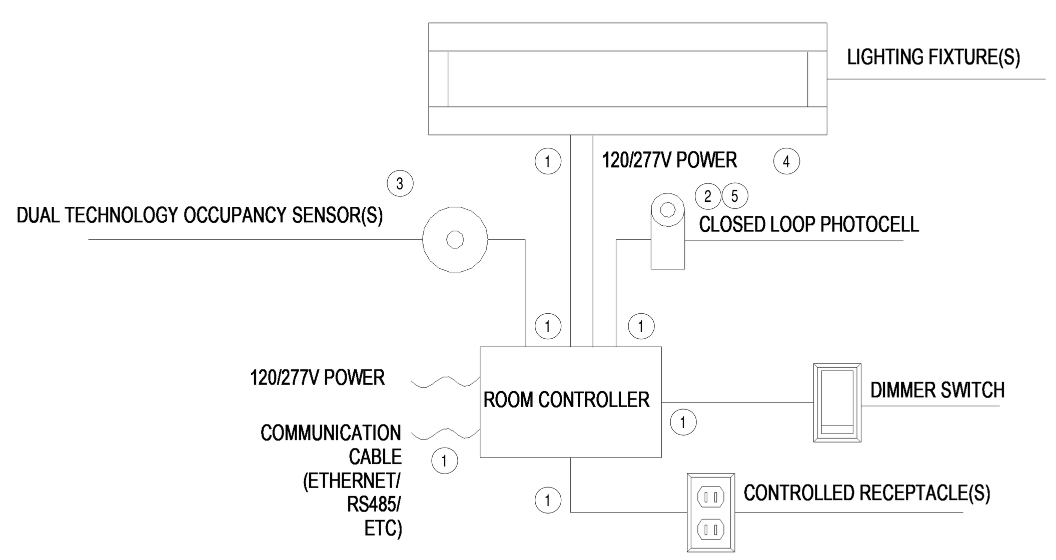

GENERAL NOTES:

1. INSTALL ALL LIGHTING PER MANUFACTURER'S REQUIREMENTS

2. TUNE OCCUPANCY SENSORS FOR NOISE, DO NOT LOCATE NEAR AIR VENTS

3. A CONTROLLED RECEPTACLE SHALL BE INSTALLED WITHIN 6 FEET OF EACH UNCONTROLLED RECEPTACLE WITHIN THE ZONE TYPES DEFINED IN THIS DETAIL.

CONSTRUCTION NOTES:

(1) LOW VOLTAGE CABLING SHALL BE PER MANUFACTURER REQUIREMENTS

(2) OPEN LOOP SENSOR(S) ACCEPTABLE, CONTRACTOR TO PLACE SENSOR PER MANUFACTURER'S REQUIREMENTS

(3) OCCUPANCY SENSOR TO BE DUAL TECHNOLOGY

(4) POWER ROUTED TO FIXTURE(S) THROUGH ROOM CONTROLLER WHERE REQUIRED BY MANUFACTURER

(5) PROVIDE PHOTOCELLS IN ALL DAYLIT ZONES WITH TOTAL WATTAGE OF FIXTURES IN ZONES EXCEEDS 120 WATTS

TYP. LOBBY, PRIVATE OFFICE, OPEN OFFICE, BREAK ROOM & CONF. ROOM LIGHTING CONTROL DIAGRAM 2

LUMINAIRE SCHEDULE

TYPE	VOLTS	WATTAGE	LUMEN	LAMPS	COLOR TEMP	MOUNTING	FIXTURE DESCRIPTION	MFR.	CATALOG #	NOTES	SYMBOL
F1	120 V	34 W	3800 lm	LED	35 K	RECESSED	2'X4' RECESSED LED FIXTURE WITH 0-10V DIMMING	SIGNIFY	2-FG-G-*-38L-835-4-D-UNV -DIM-*		
F2	120 V	27 W	3000 lm	LED	35 K	RECESSED	2'X2' RECESSED LED FIXTURE WITH 0-10V DIMMING	SIGNIFY	2-FG-G-*-30L835-2-D-UNV-DIM-*		
F3	120 V	18 W	1000 lm	LED	3 K	PENDANT	52" PENDANT MOUNTED LED CEILING FAN	LUMENCIA	LL52CNT4ST-ES-LED		
F4	120 V	24 W	2000 lm	LED	3 K	MOUNTING	11" SURFACE MOUNT CEILING DRUM	LUMENCIA	LL2-0246D-A-3K-*		
F5	120 V	15 W	1432 lm (1)	LED (WITH UNIT)	35 K	RECESSED	4" RECESSED LED DOWNLIGHT WITH 0-10V DIMMING.	PATHWAY LIGHTING	4SFK4SFKIEM-X-4SFL2X-15-35K-E1-DA-*-		
F6	120 V	8 W	1162 lm	LED 3000K	35 K	PENDANT	12.43" SUSPENDED HIGHBAY WITH 4'-4" STEM. MOUNTING HEIGHT 17'6 FROM TOP OF FIXTURE TO A.F.F. 0-10V DIMMING	CALIBER PLUS	P5-*-*-*-V-10-35K-DA-P-52-*		
F7	120 V	15 W	1000 lm	LED 3500K	35 K	WALL	2' WALL MOUNTED LED FIXTURE MOUNTED 12' A.F.F. 0-10V DIMMING	LCD	SCA-2-*-35-*-*-*-VAR-DM-* -*-*-W-*-D-*		
F8	120 V	12 W	1043 lm	LED (WITH UNIT)	35 K	RECESSED	4" RECESSED LED DOWNLIGHT WITH 0-10V DIMMING. WET LOCATION	PATHWAY LIGHTING	4SFK4SFKIEM-X-4SFL2X-11-35K-E1-DA-*-		
F9	120 V	10 W	3000 lm	LED	35 K	SURFACE	4' SURFACE MOUNT WRAP WITH 0-10V DIMMING. LOCATED IN RM 106, 116. (1)	H.E. WILLIAMS	39-4-L52/835-A-OPTIONS-DIM-UNV		
F10	120 V	20 W	1600 lm	LED	30 K		26" WALL MOUNTED VANITY LIGHT. DIMMABLE.	PLC LIGHTING	962	(1)	
F11	120 V	5 W		LED (WITH UNIT)		WALL/CEILING	SURFACE MOUNTED THERMOPLASTIC EMERGENCY EXIT SIGN FIXTURE WITH 90-MIN. BATTERY BACKUP	DUAL-LITE	LES-C-S-G-*-W-*-* 120/277		
F12	120 V	2 W	(1)	LED (WITH UNIT)		WALL/CEILING	ILLUMINATED EXIT SIGN, GREEN LETTERS, MOUNTING TBD, BRUSHED ALUM FINISH	DUAL-LITE	LES-W-S-G-*-W-*-*		
S1	120 V	50 W	6115 lm	LED	4 K	WALL	12.02" X 6" SURFACE MOUNT WALL SCONCE. FIXTURE INCLUDES INTEGRAL MOTION AND AMBIENT LIGHT SENSOR. DIMMABLE.	LITHONIA	KAXW-LED-P2-40K-R3-MVOLT-BLANK-PIR-*-*	PROVIDE WITH BOTH PIR AND PIRH FOR CONTROL OPTIONS FOR APPROPRIATE MOUNTING HEIGHT	

1. THE FIXTURE SCHEDULE INDICATES GENERAL DESCRIPTION OF LIGHTING FIXTURES AND MANUFACTURERS CATALOG NUMBERS. IT SHALL BE THE CONTRACTORS RESPONSIBILITY TO DETERMINE THE CORRECT CEILING CONFIGURATION AND PROVIDE THE FIXTURES WITH ALL NECESSARY TRIMS AND MOUNTING HARDWARE SO THAT BOTH THE CEILING SYSTEM AND THE FIXTURE CONSTRUCTION MATCHES. PROVIDE SEISMIC HANGERS AS REQUIRED.

2. IT SHALL BE CONTRACTORS RESPONSIBILITY TO VERIFY THE EXACT LOCATION OF ALL LIGHTING FIXTURES AND TYPE OF CEILING WITH ARCHITECTURAL REFLECTED CEILING PLAN PRIOR TO ANY WORK. SEE ARCHITECTURAL REFLECTED CEILING PLAN PRIOR TO ANY WORK. SEE ARCHITECTURAL ELEVATION DRAWING FOR MOUNTING HEIGHTS OF WALL MOUNTED FIXTURES.

3. A JUNCTION BOX MUST BE PROVIDED WITH ALL EXIT LIGHTS CONNECTED TO MORE THAN ONE SET OF CONDUCTORS UNLESS THE EXIT LIGHT FIXTURE IS FURNISHED WITH AN APPROVED OUTLET BOX FOR THROUGH WIRING.

4. (1) LIGHTING FIXTURE WIRING FOR ROOMS CONTROLLED BY MORE THAN ONE LIGHT SWITCH SHALL BE ARRANGED SO THAT THE OUTSIDE LAMPS ON EACH FIXTURE ARE CONTROLLED BY ONE SWITCH AND THE INSIDE LAMPS BY THE OTHER TO PROVIDE MULTI-LEVELS OF ILLUMINATION.

5. BATTERY PACK EMERGENCY TEST SWITCHES SHALL BE INTEGRAL TO LIGHT FIXTURE. COORDINATION OF SWITCH LOCATION IS REQUIRED WITH DESIGN TEAM IF INTEGRAL INSTALLATION IS NOT POSSIBLE.

6. FIXTURES DESIGNATED AS EMERGENCY SHALL BE SUPPLIED WITH INTEGRAL BATTERY PACK CAPABLE OF POWERING TWO T8 LAMPS FOR 90 MINUTES WITH A TOTAL LIGHT OUTPUT OF 1100 LUMENS OR ONE F13 BIAX FOR 90 MINUTES WITH A TOTAL LIGHT OUTPUT OF 520 LUMENS.

7. PROVIDE ALL REQUIRED MOUNTING HARDWARE ANCHORAGE AND SUPPORTS TO INSTALL LIGHTING FIXTURES.

8. PROVIDE SWIVEL BASE AND STEMS. LENGTHS AS REQUIRED TO MOUNT THE PENDANT MOUNTED FIXTURES. THE INSTALLATION SHALL COMPLY WITH TITLE 24 SEISMIC AND APPLICABLE UBC REQUIREMENTS.

9. SUSPENSION SYSTEM FOR LIGHT FIXTURES WHICH HAVE PASSED SHAKING TABLE TESTS APPROVED BY THE OFFICE OF THE STATE OF ARCHITECT, OR WHICH, AS INSTALLED, ARE FREE TO SWING A MINIMUM OF 45' FROM THE VERTICAL IN ALL DIRECTIONS WITHOUT CONTACTING OBSTRUCTIONS. SHALL BE ASSUMED TO COMPLY WITH THE LATERAL FORCE REQUIREMENTS FOR SECTION 2305, PART 2, TITLE 24, CCR. UNLESS OF THE CABLE TYPE FREE SWING SUSPENSION SYSTEM SHALL HAVE A SAFETY WIRE OR CABLE ATTACHED TO THE FIXTURE AND STRUCTURE AT EACH SUPPORT CAPABLE OF SUPPORTING FOUR TIMES THE SUPPORTED LOAD.

10. FOR SUSPENDED AND SURFACE MOUNTED LIGHT FIXTURES, THE PRODUCT OF ICP NEED NOT EXCEED 12 FOR ANY VALUE OF 1.

11. LED LIGHT FIXTURES SHALL BE IN ACCORDANCE WITH IES, NFPA, UL, AS SHOWN ON THE DRAWINGS, AND AS SPECIFIED.

12. LED LIGHT FIXTURES SHALL BE REDUCTION OF HAZARDOUS SUBSTANCES (ROHS)-COMPLIANT. (1)

13. LED DRIVERS SHALL INCLUDE THE FOLLOWING FEATURES UNLESS OTHERWISE INDICATED:
    - MINIMUM EFFICIENCY: 85% AT FULL LOAD.
    - MINIMUM OPERATING AMBIENT TEMPERATURE: -20 DEG C. (-4 DEG F.)
    - INPUT VOLTAGE: 120 - 277V (±10%) AT 60 HZ.
    - INTEGRAL SHORT CIRCUIT, OPEN CIRCUIT, AND OVERLOAD PROTECTION.
    - POWER FACTOR: >=0.95.
    - TOTAL HARMONIC DISTORTION: <=20%.
    - COMPLY WITH FCC 47 CFR PART 15.

14. LED MODULES SHALL INCLUDE THE FOLLOWING FEATURES UNLESS OTHERWISE INDICATED:
    - COMPLY WITH IES LM-79 AND LM-80 REQUIREMENTS.
    - MINIMUM CRI 80 AND COLOR TEMPERATURE 4000K UNLESS OTHERWISE SPECIFIED IN LUMINAIRE SCHEDULE.
    - MINIMUM RATED LIFE: 50,000 HOURS PER IES L70.
    - LIGHT OUTPUT LUMENS AS INDICATED IN THE LUMINAIRE SCHEDULE.

15. LED DOWNLIGHTS:
    - HOUSING, LED DRIVER, AND LED MODULE SHALL BE PRODUCTS OF THE SAME MANUFACTURER.

16. LED TROFFERS:
    - LED DRIVERS, MODULES, AND REFLECTOR SHALL BE ACCESSIBLE, SERVICEABLE, AND REPLACEABLE FROM BELOW THE CEILING.
    - HOUSING, LED DRIVER, AND LED MODULE SHALL BE PRODUCTS OF THE SAME MANUFACTURER.

17. ALL EXTERIOR LIGHTING POLLUTION MUST COMPLY WITH CGC SECTION 5.106.8. (1)

HOLT ARCHITECTURE
70225 HWY 111, SUITE D
RANCHO MIRAGE, CA 92270
PH: 760.328.5280
3891 11TH STREET
RIVERSIDE, CA 92501
PH: 951.462.1451

CONSULTANT:
DESIGN WEST ENGINEERING
MECHANICAL • ELECTRICAL • ENERGY CONSULTANTS
275 W. Hospitality Lane Suite #100
San Bernardino, CA 92408
Phone: 909.890.3700
Fax: 909.890.3770
email: info@designwesteng.com

STAMPS:

REGISTERED PROFESSIONAL ENGINEER
Exp. 6-30-2021
ELECTRICAL
STATE OF CALIFORNIA

PROJECT:

NILAND PUBLIC SAFETY FACILITY

8071 LUXOR AVE.
NILAND CA 92257

CLIENT:

IMPERIAL COUNTY CALIFORNIA 1907

MARK	DATE	DESCRIPTION
	04/09/19	PLAN CHECK SUBMITTAL #1
1	05/14/19	PLAN CHECK SUBMITTAL #2
2	06/11/19	PLAN CHECK SUBMITTAL #3

PROJECT NO.: TGH.012
DRAWN BY: Author
CHK'D BY: Checker
ORIGINAL DATE:

SHEET TITLE:

LUMINAIRE SCHEDULE

SHEET No.:

E-0.2

19-022

© 2018 Holt Architects, Inc.
C:\Users\lrodriguez\Documents\19-022 Niland Public Safety Building_MEP_Central_lrodriguez.rvt